Operation/Reference Guide

Modero® VG-Series

G4 Touch Panels

NXD/NXT-1200VG, NXD/NXT-1500VG, and NXD/NXT-1700VG

Touch Panels

Last Revised: 10/1/2008

AMX Limited Warranty and Disclaimer

All products returned to AMX require a Return Material Authorization (RMA) number. The RMA number is obtained from the AMX RMA Department. The RMA number must be clearly marked on the outside of each box. The RMA is valid for a 30-day period. After the 30-day period the RMA will be cancelled. Any shipments received not consistent with the RMA, or after the RMA is cancelled, will be refused. AMX is not responsible for products returned without a valid RMA number.

Warranty Repair Policy

- AMX will repair any defect due to material or workmanship issues during the applicable warranty period at no cost to the AMX Authorized Partner., provided that the AMX Authorized Partner is responsible for in-bound freight and AMX is responsible for out-bound ground freight expenses.
- The AMX Authorized Partner must contact AMX Technical Support to validate the failure before pursuing this service.
- AMX will complete the repair and ship the product within five (5) business days after receipt of the product by AMX. The AMX Authorized Partner will be notified if repair cannot be completed within five (5) business days.
- Products repaired will carry a ninety (90) day warranty or the balance of the remaining warranty, whichever is greater.
- Products that are returned and exhibit signs of damage or unauthorized use will be processed under the Non-Warranty Repair Policy.
- AMX will continue to provide Warranty Repair Services for products discontinued or replaced by a Product Discontinuance Notice.

Non-Warranty Repair Policy

- Products that do not qualify to be repaired under the Warranty Repair Policy due to age of the product or Condition of the product may be repaired utilizing this service.
- The AMX Authorized Partner must contact AMX Technical Support to validate the failure before pursuing this service.
- Non-warranty repair is a billable service.
- Products repaired under this policy will carry a ninety (90) day warranty on material and labor.
- AMX will notify the AMX Authorized Partner with the cost of repair, if cost is greater than the Standard Repair Fee, within five (5) days of receipt.
- The AMX Authorized Partner must provide a Purchase Order or credit card number within five (5) days of notification, or the product will be returned to the AMX Authorized Partner.
- The AMX Authorized Partner will be responsible for in-bound and out-bound freight expenses.
- Products will be repaired within ten (10) business days after AMX Authorized Partner approval is obtained.
- Non-repairable products will be returned to the AMX Authorized Partner with an explanation.
- See AMX Non-Warranty Repair Price List for minimum and Standard Repair Fees and policies.

FCC Information

This device complies with Part 15 of the FCC Rules. Operation is subject to the following two conditions: (1) this device may not cause harmful interference, and (2) this device must accept any interference received; including interference that may cause undesired operation.

Federal Communications Commission (FCC) Statement

This equipment has been tested and found to comply with the limits for a Class B digital device, pursuant to Part 15 of the FCC rules. These limits are designed to provide reasonable protection against harmful interference in a residential installation. This equipment generates, uses and can radiate radio frequency energy, and, if not installed and used in accordance with the instructions, may cause harmful interference to radio communications. However, there is no guarantee that interference will not occur in a particular installation. If this equipment does cause harmful interference to radio or television reception, which can be determined by turning the equipment off and on, the user is encouraged to try to correct the interference by one or more of the following measures:

- Reorient or relocate the receiving antenna.
- Increase the separation between the equipment and receiver.
- Connect the equipment into an outlet on a circuit different from that to which the receiver is connected.
- Consult the dealer or an experienced radio/TV technician for help.

FCC RF Radiation Exposure Statement

This transmitter must not be co-located or operating in conjunction with any other antenna or transmitter. This equipment complies with FCC RF radiation exposure limits set forth for an uncontrolled environment. This equipment should be installed an operated with a minimum distance of 20 centimeters between the radiator and your body.

Table of Contents

Introduction 1

Multimedia Streaming Video Touch Panels (VG-Series) 1

Product Specifications (NXD-1200VG and NXT-1200VG) 2

Product Specifications (NXD-1500VG and NXT-1500VG) 7

Product Specifications (NXD-1700VG and NXT-1700VG) 12

VG-Series Modero Connectors 17

Connecting and Using USB Input Devices 17

Cleaning the Touch Overlay 18

Touch Panel Accessories 19

Overview 19

NXA-AVB/RGB Breakout Box (FG2254-11) 19

Product Specifications 20

RGB RJ-45 connection and wiring information 21

Using the HD-15 high-density connector 22

Installing the NXA-AVB/RGB 22

Wiring the NXA-AVB/RGB connectors and cables 23

Wiring the NXA-AVB/RGB for Unbalanced Audio 24

Wiring the NXA-AVB/RGB for Balanced Audio 25

Preparing your panel for Pass-Thru Control (using the NXA-AVB/RGB Breakout Box) . 26

Wiring for Pass-Thru Computer Control 27

NXA-MTC/RGB Combo Table Top Cable (CA2250-70) 28

Product Specifications 28

Wiring and Connection Information 29

Installing CAT5 Suppression Ferrites 30

NXA-RGB RGB/VGA Interface Card (FG2260) 31

Product Specifications 32

Supported Component/VGA Video Resolutions and Formats 33

RGB RJ-45 connection and wiring information 33

NXA-CFTP Compact Flash (FG2116-22) 34

NXA-PCI80211G Wireless Card (FG2255-04) 35

Product Specifications 35

Installation and Upgrade of the Internal NXT Components 37

Step 1: Remove the existing NXT Outer Housing 37

Step 2: Install the 802.11g mini-PCI Wireless Card 38

Step 3: Install the NXA-RGB Card Component (NXT) 39

Step 4: Install the Compact Flash Memory Card upgrade 40

Step 5: Close and Resecure the NXT Panel Enclosure 41

Installation and Upgrade of the Internal NXD Components 42
Step 1: Remove the existing NXD Outer Housing 42
Step 2: Install the new 802.11g mini-PCI Wireless card (NXD) 43
Step 3: Install the new RGB Card Component (NXD) 43
Step 4: Install the new Compact Flash Memory card (NXD) 43
Step 5: Close and Resecure the NXD Panel Enclosure 43
NXT-BP Power Pack (FG2255-10) 44
Product Specifications 44
NXA-BASE/B Battery Base Kit (FG2255K) 45
Product Specifications 45
Checking the NXT-BP battery charge 46
Installing the NXA-BASE/B to an NXT Modero Panel 46
Installing an NXT-BP into the NXA-BASE/B 47
Charging the NXT-BP batteries with the NXA-BASE/B 48
NXT-CHG Battery Charger Kit (FG2255-50K) 49
Product Specifications 49
Powering the NXT-CHG 50
Reading NXT-CHG LED Indicator 50
Charging the NXT-BP batteries using the NXT-CHG 50
Recalibrating the batteries 51
Installation Procedures: 12" and 15" Panels 53
Overview 53
Unpacking the Panel 53
Installing Internal Components 53
Upgrading to the MB-TP12/MB-TP15 VESA Mounting Kit 53
Removing the Original Modero Back Box 54
Installing the MP-TP12/15 Back Box 54
Cable Installation for the MP-TP12/15 Back Box 55
Finalizing the installation 55
Pre-wall Installation of the Conduit Boxes 58
Installation of the NXD Touch Panel 59
Installing the NXD panel within a Conduit Box 59
Installing the NXD into drywall using Expansion Clips 60
Installing the NXD into a Flat Surface using #4 screws 63
Installing an NXD into an (optional) Rack Mount Kit (NXA-RK12 or NXA-RK15) 66
Wiring Guidelines for the 1200VG and 1500VG Panels 68
Preparing captive wires 68
Wiring a power connection 68
Audio/Video Port: Connections and Wiring 69

Ethernet/RJ-45 Port: Connections and Wiring 69
Installation Procedures: 17" Panels 71
Overview 71
Unpacking the Panel 71
Installing the Internal Components 71
Upgrading the Back Box with the MB-TP17 VESA Housing 71
Removing the Original Modero Back Box 71
Installing the MP-TP17 Back Box 72
Cable Installation for the MP-TP17 Back Box 73
Finalizing the installation 73
Pre-wall Installation of the CB-TP17 Conduit Box 75
Installation of an NXD-1700VG 77
Installing the NXD-1700VG within a CB-TP17 Conduit Box 77
Installing the NXD-1700VG into drywall using Expansion Clips 79
Installing the NXD-1700VG into a Flat Surface using #6 screws 83
Installing an NXD into an (optional) Rack Mount Kit (NXA-RK17) 86
Wiring Guidelines for the 1700VG Panels 87
Preparing captive wires 87
Wiring a power connection 87
Audio/Video Port: Connections and Wiring 88
Ethernet/RJ-45 Port: Connections and Wiring 88
Panel Calibration 91
Overview 91
Calibrating the Modero Panel 91
Testing your Calibration 92
Configuring Communication 93
Overview 93
Modero Setup and System Connection 93
Configuring and Using USB with a Virtual Master 95
Step 1: Setting up the USB Driver on the PC 95
Step 2: Confirming the Installation of the USB Driver on the PC 96
Step 3: Confirm and View the current AMX USB device connections 98
Step 4: Using a USB to Configure a Virtual Master (using NetLinx Studio) 98
Step 5: Confirm and View the current AMX USB device connections 100
Wireless Settings Page - Wireless Access Overview 101
IP Routing 101
Hot Swapping 101
Configuring a Wireless Connection 102
Step 1: Configuring the Panel's Wireless IP Settings 102

Wireless communication using a DHCP Address 102
Wireless communication using a Static IP Address 103
Step 2: Configuring the Card's Wireless Security Settings 104
Configuring the Modero's wireless card for unsecured access to a WAP200G 104
Configuring the Modero's wireless card for secured access to a WAP200G 105
Configuring multiple wireless Moderos to communicate to a target WAP200G 108
Configuring a Wired Ethernet Connection 109
Step 1: Configuring the Panel's Wired IP Settings 109
IP Settings section - Configuring a DHCP Address over Ethernet 109
IP Settings section - Configuring a Static IP Address over Ethernet 110
Step 2: Choosing a Master Connection Mode Setting 110
Step 3: Configuring the Ethernet Connection Type 111
Master Connection - Virtual Master communication over Ethernet 112
Master Connection section - NetLinx Master Ethernet IP Address - URL Mode 114
Master Connection section - NetLinx Master Ethernet IP Address - Listen Mode 114
Master Connection section - NetLinx Master Ethernet IP Address - Auto Mode 115
Using G4 Web Control to Interact with a G4 Panel 116
Using your NetLinx Master to control the G4 panels 118
Upgrading Modero Firmware 121
Overview 121
Upgrading the Modero Firmware via the USB port 121
Step 1: Configure the panel for a USB Connection Type 121
Step 2: Prepare NetLinx Studio for communication via the USB port 122
Step 3: Confirm and Upgrade the firmware via the USB port 123
Upgrading the Modero Firmware via an IP Address 125
Step 1: Prepare the Master for communication via an IP 125
Step 2: Prepare the panel for communication via an IP 126
Step 3: Verify and Upgrade the panel firmware via an IP 127
Upgrading Accessory Devices via an IP Address 128
Step 1: Prepare the NXA-BASE/B for firmware transfer 129
Step 2: Upgrade the NXA-BASE/B firmware via an IP 130
Upgrading the NXA-RGB and NXA-AVB/RGB Firmware 132
Firmware Pages and Descriptions 133
Overview 133
Setup Navigation Buttons 133
Setup Page 134
Project Information Page 136
Panel Information Page 137
Time & Date Setup Page 138

Volume Page 139
Supported sampling rates for WAV 140
Protected Setup Page 140
Video Adjustment Slide-Out Option Bar 141
Video Adjustment - Video Adjustment Page 141
Video Adjustment - RGB Adjustment Page 142
Adjusting the Incoming Signal on the RGB Adjustment Page 145
Video Adjustment - Streaming Adjustment Page 148
Battery Base Page 151
Protected Setup Navigation Buttons 153
Protected Setup Page 154
G4 Web Control Page 156
Sensor Setup Page 158
Using the Automated Brightness Control feature (DIM Mode) 159
Password Setup Page 160
Calibration Page 161
Wireless Settings Page 162
System Settings Page 166
Displaying Stream Content 169
Overview 169
Requirements for Receiving Streamed Content 170
Setting up a Modero Panel to Receive and Display a Stream 171
Step 1: Obtaining the IP Address of the target panel 171
Step 2: Configuring the MAX-CSE for communication 172
Step 3: Configuring the MAX-CSE audio/video inputs 174
Step 4: Setup a streaming page within TPDesign4 175
Step 5: Establishing the final connection between the two units 177
Programming 179
Button Assignments 179
Page Commands 179
Programming Numbers 185
RGB triplets and names for basic 88 colors 185
Font styles and ID numbers 187
Border styles 188
"^" Button Commands 190
Text Effect Names 211
Button Query Commands 212
Panel Runtime Operations 221
Input Commands 225

Embedded Codes 227
Panel Setup Commands 228
Dynamic Image Commands 229
Troubleshooting 231
Appendix 235
Text Formatting Codes for Bargraphs/Joysticks 235
Text Area Input Masking 236
Input mask character types 236
Input mask ranges 237
Input mask next field characters 237
Input mask operations 237
Input mask literals 237
Input mask output examples 238
URL Resources 239
Special escape sequences 239

Introduction

AMX has taken a quantum leap forward with the release of their new VG-Series of Modero touch panels. These panels offer streaming MPEG video, high-definition Component RGB input and display, USB support for extended input devices, and panel programming via a mini-USB port.

The new G4 graphics and Video/RGB technology is supported by the release of the latest TPDesign4 Touch Panel Design Program. These video-capable panels support several video formats: NTSC, SECAM, and PAL (*Color Active (CA) panels don't support video*).

Multimedia Streaming Video Touch Panels (VG-Series)

Although these panels are similar to the 1200V models, in that they both share connectors for USB communication and Audio/Video distribution; the VG-Series far exceed those panels by additionally providing RGB Component video display, MPEG streaming technology, and pass-thru computer control.

These panels are capable of NTSC/PAL/SECAM video formats within variable sized video windows. These VG-Series panels display HDTV Component video (*fed from an external NXA-AVB/RGB Breakout Box and then through an internal NXA-RGB card*). In addition to composite video support, the new VG-Series of panels now feature USB connectivity for mouse and keyboard, and pre-installed antennas for all Table Top models.

Powered by a cutting-edge DSP core, the VG-Series has the muscle to handle digital streaming (both video and audio), in wired or wireless configurations. These Moderos feature full support for standard MPEG-2 streaming video as well as MP3 and AAC streaming audio.

The NXA-AVB/RGB Breakout Box (**FG2254-11**) facilitates the installation and distribution of video (Composite and Component), data, audio, and pass-thru Computer Control to Modero touch panels located up to 200 feet (60.96 m) from the NXA-AVB/RGB box.

The VG-Series of touch panels can be fitted for either Video (Composite) or RGB (Component) via the use of two Kit configurations: Video Kit and RGB Kit. Each kit comes with its own group of standard components that are specific to its configuration. Although a panel can be order with either of these kits; a previously fitted Video Kit panel can be later upgraded to accept and display RGB Component via the use of an RGB upgrade package called the NXA-RGBKIT (**FG2255-11**). This upgrade kit supplements the existing Video fitted panel (FG225X-XX**V**) with such things as an internal NXA-RGB interface card and an external NXA-AVB/RGB Breakout Box.

The Video Kit fitted units can accept either Composite or S-Video from standard video devices. These Composite video panels include those listed below:

Modero Multimedia Touch Panels (VG-Series with Video Kits)	
NXD-1200VG (**FG2251-61V**)	12" Modero Multimedia WallMount Touch Panel with Video Kit.
NXT-1200VG (**FG2250-61V**)	12" Modero Multimedia Table Top Touch Panel with Video Kit.
NXD-1500VG (**FG2253-61V**)	15" Modero Multimedia WallMount Touch Panel with Video Kit.
NXT-1500VG (**FG2252-61V**)	15" Modero Multimedia Table Top Touch Panel with Video Kit.
NXD-1700VG (**FG2256-61V**)	17" Modero Widescreen WallMount Touch Panel with Video Kit.
NXT-1700VG (**FG2257-61V**)	17" Modero Widescreen Table Top Touch Panel with Video Kit.

The Video Kits include the following components:

- Modero VG-Series Touch Panel (NXD or NXT) (**FG225**X-XX**V**)
- Modero 10' foot Table Top Cable (CA2250-50)
- NXA-AVB/ETHERNET Breakout Box (**FG2254-10**)

These panels are capable of displaying both Composite video and High-Definition Component RGB, bringing together both Video and RGB capability together into one panel.

Modero Video/RGB-compatible panels utilize an internal NXA-RGB interface card (*combined with an external NXA-AVB/RGB Breakout Box*) to accept and display high-bandwidth and high-quality RGB and HDTV Component video signals. An existing Video Kit fitted VG-Series touch panel (Video only) can be upgraded to display RGB input by purchasing a separate NXA-RGBKIT. These Video/RGB panels include those listed below:

Modero Multimedia Touch Panels (VG-Series with RGB Kits)	
NXD-1200VG (**FG2251-61RGB**)	12" Modero Multimedia WallMount Touch Panel with RGB Kit.
NXT-1200VG (**FG2250-61RGB**)	12" Modero Multimedia Table Top Touch Panel with RGB Kit.
NXD-1500VG (**FG2253-61RGB**)	15" Modero Multimedia WallMount Touch Panel with RGB Kit.
NXT-1500VG (**FG2252-61RGB**)	15" Modero Multimedia Table Top Touch Panel with RGB Kit.
NXD-1700VG (**FG2256-61RGB**)	17" Modero Widescreen WallMount Touch Panel with RGB Kit.
NXT-1700VG (**FG2257-61RGB**)	17" Modero Widescreen Table Top Touch Panel with RGB Kit.

The RGB Kits include the following components:

- Modero VG-Series Touch Panel (NXD or NXT) (**FG225**X-XX**RGB**)
- NXA-AVB/RGB Breakout Box (**FG2254-11**)
- NXA-RGB internal RGB/VGA Interface Card (**FG2260**) ***(pre-installed)***
- NXA-MTC/RGB Modero 10' foot Table Top Cable (*with RGB connector*) (CA2250-70)
- NXA-RGBCBL, 15-pin to 5X BNC RGB Breakout cable (**FG2250-80**)

Product Specifications (NXD-1200VG and NXT-1200VG)

The following table outlines the specifications for VG-Series of 12" Modero panels.

1200VG Panel Specifications	
Dimensions (HWD):	• NXD-1200VG (with faceplate): 12.38" x 12.59" x 3.25" (31.43 cm x 31.97 cm x 8.25 cm) • NXT-1200VG (Fully raised): 10.91" x 12.34" x 12.50" (27.70 cm x 31.33 cm x 31.75 cm) • NXT-1200VG (Fully lowered): 6.77" x 12.34" x 12.50" (17.20 cm x 31.33 cm x 31.75 cm) • CB-TP12 (conduit/wallbox): 11.52" x 11.60" x 3.50" (29.27 cm x 29.47 cm x 8.89 cm) • MB-TP12 (VESA mounting box): 12.37" x 12.58" x 3.52" (31.42 cm x 31.95 cm x 8.94 cm)
Power Requirements:	• Constant current draw: 2.3 A @ 12 VDC (stand-alone) • Startup current draw: 3.5 A @ 12 VDC (stand-alone)
Memory (factory default):	• 256 MB on-board memory • 128 MB Compact Flash (upgradeable to 1 GB factory programmed)
Weight:	• NXD-1200VG: 10.80 lbs (4.90 kg) • NXT-1200VG: 10.80 (4.90 kg)

1200VG Panel Specifications (Cont.)	
Panel LCD Parameters:	• Aspect Ratio: 4 x 3 • Brightness (luminance): 250 cd/m^2 • Channel transparency: 8-bit Alpha channel transparency • Contrast ratio: 300:1 • Display area (HW): 183.10 mm x 247.40 mm • Display colors: 256K (18-bit color depth) • Dot/Pixel pitch: 0.297 mm • Screen resolution (HV): 800 x 600 pixels • Video formats: NTSC, PAL, and SECAM (shown within variable-size video windows)
Active Screen Area:	• 9.69” x 7.26” (24.60cm x 18.45cm)
Viewing Angles:	• Vertical: + 80° (up from center) and - 80° (down from center)
Features:	• Display of Component RGB/HDTV signals (done through the use of both an internal NXA-RGB card and an external NXA-AVB/RGB Breakout Box) • Enhanced hardware security (via an externally mounted Kensington Lock system) • Ethernet connectivity (*replaced ICSNet as a method of communication*) • New and improved connector compartment • Pass-thru Computer Control (*via the NXA-RGB card*) • RGB or Component input • Streaming MPEG-2 and MPEG-4 digital video support • Streaming MP2, MP3, and AAC digital audio support • Support of the latest G4 applications: G4 Computer Control, G4Web Control®, Dynamo, TakeNote™, and PictureFrame™. • USB mouse/keyboard/programming ports
Supported Audio Sample Rates:	• 48000Hz, 44100Hz, 32000Hz, 24000Hz, 22050Hz, 16000Hz, 12000Hz, 11025Hz, and 8000Hz.
Certifications:	• FCC Part 15 Class B, CE, and EN 60950
Supported Transport Protocols:	• RTP (MPEG-2/MPEG-4 Transport Stream) • UDP (MPEG-2 Transport Stream)
Supported Audio Codecs:	• Advanced Audio Coding (AAC) • MPEG Audio Level 2 (MP2) • MPEG Audio Level 3 (MP3)
Supported Video Codecs:	• MPEG-2 • MPEG-4
Button Assignments:	Button assignments can only be adjusted in TPD4 and not on the panels. • Button channel range: 1 - 4000 button push and Feedback (per address port) • Button variable text range: 1 - 4000 (per address port) • Button states range: 1 - 256 (General Button; 1 = Off State, 2 = On State) • Level range: 1 - 600 (default level value 0-255, can be set up to 1-65535) • Address port range: 1 - 100

1200VG Panel Specifications (Cont.)	
Front Panel Components:	
Light sensor:	• Photosensitive light detector for automatic adjustment of the panel brightness (a dim room results in a dimmer LCD display and a bright room results in a brighter LCD display). **Note:** The light sensor can be adjusted via the *Sensor Setup Page* section on page 158.
Motion sensor (PIR):	• Proximity Infrared Detector to wake the panel when the panel is approached. • Activation range: ± 20° vertically from center and ± 45° horizontally from center. **Note:** The motion sensor can be adjusted via the Sensor Setup page (*Sensor Setup Page* section on page 158).
Front setup access button:	• Provides both access to the Setup and Calibration pages and toggles the panel between a "sleep" and "wake" state. - When wired, "sleep" status means the backlight is Off. - When battery operated, wireless "sleep" status means the touch panel base is either Off or "suspended".
Microphone:	• Used for intercom applications (***requires an optional NXA-AVB/RGB or NXA-AVB/ETHERNET Breakout Box***).
Speakers:	• Stereo output with a frequency response of 450 Hz - 7 KHz
Rear Panel Components:	(Side panel location on NXD-Wall Mount panels)
RGB connector	• This connector is only made available only by using an NXA-RGB interface card installed within the touch panel. This card is sold either as part of an RGB Kit configuration or within the NXA-RGBKIT upgrade kit for previous Video Kit fitted VG-Series panels. • Routes RGB and computer control pass-thru signals to/from a Modero panel up to 200 ft. (60.9 m). • RJ-45 connector provides RGB/Component video signals (being routed from the rear RGB/Component input ports) and touch control information to the RJ-45 RGB connector on the NXA-RGB card (installed within the panel). This connector routes VGA and Component video signals.
Audio/Video connector:	• RJ-45 connector for communication of differential audio/video signals to/from the touch panel (panel type dependant). This connector receives Composite video, Stereo (left/right) audio, and microphone audio. • Video is received via the NXA-AVB/RGB Breakout Box. Configuring video windows for playback is done using TPDesign4. • In-bound audio (from the Breakout Box) gets directed to the speakers. • Out-bound audio is sent from the on-board microphone (on the front-panel). Selecting audio files for playback is configured through TPDesign4.
Ethernet 10/100 port:	• RJ-45 port for 10/100 Mbps communication. The Ethernet port automatically negotiates the connection speed (10 Mbps or 100 Mbps), and whether to use half duplex or full duplex mode. • These panels communicate with the NetLinx® Master using the ICSP protocol over Ethernet.
Ethernet 10/100 LEDs:	• LEDs show communication activity and connection information: **A**-activity - Yellow LED lights when receiving or transmitting Ethernet data packets. **L**-link - Green LED lights when the Ethernet cables are connected and terminated correctly.

1200VG Panel Specifications (Cont.)	
Rear Panel Components (Cont.):	(Side panel location on NXD-Wall Mount panels)
PWR connector:	• 2-pin 3.5 mm mini-Phoenix connector.
Stereo Output connector:	• Stereo output through a 3.5mm mini-jack (for use with external speakers).
USB connector (2):	• The two Type-A USB ports can connect up to two external keyboard or mouse devices for use with Virtual PC applications. • These ports can be used to communicate to a PC and transfer pass-thru touch control from the external devices, thru the NXA-AVB/RGB, to the PC, and then back again. Refer to the *Preparing your panel for Pass-Thru Control (using the NXA-AVB/RGB Breakout Box)* section on page 26.
Mini-USB connector:	• 5-pin Mini-USB connector used for programming, firmware update, and touch panel file transfer between the PC and the target panel. ***Note**: When connecting the panel to PC using a CC-USB (or compatible) cable, be sure to power the panel On **before** attempting to connect the USB cable from the PC to the mini-USB port on the panel.* Refer to the *Step 5: Confirm and View the current AMX USB device connections* section on page 100 for more information.
Operating / Storage Environment:	• Operating Temperature: 10° C (50° F) to 40° C (104° F) • Operating Humidity: 20% to 85% RH • Storage Temperature: -20° C (-4° F) to 60° C (140° F) • Storage Humidity: 5% to 85% RH
Included Accessories:	• Installation Kit for 12" and 17" NXD panels (KA2251-01): - 2-pin mini-Phoenix connector (41-5025) - Four Drywall clips (62-5924-05) and #6 - sheet metal screws - **One** CAT5 Suppression Ferrites (04-0014) - Three Phillips-head screws (#4-20 x 0.250 Black) • Installation Kit for 12" NXT panels (KA2251-03): - 2-pin mini-Phoenix connector (41-5025) - Three Phillips-head screws (#4-20 x 0.250 Black) - **Two** CAT5 Suppression Ferrites (04-0014) • **Included within the RGB Kit** (**FG**xxxx-xx**RGB**) is the following: - Modero VG Touch Panel (NXD/NXT-1200/1500/1700VG) - NXA-AVB/RGB Breakout Box (**FG2254-11**) - NXA-RGB internal RGB/VGA Interface Card (**FG2260**) - NXA-RGBCBL, 15-pin to 5X BNC RGB Breakout cable (**FG2250-80**) - NXA-MTC/RGB Modero 10' foot Table Top Cable (with RGB connector) (CA2250-70) • **Included within the Video Kit** (**FG**xxxx-x**V**) is the following: - Modero VG Touch Panel (NXD/NXT-1200/1500/1700VG) - Modero 10' foot Table Top Cable (CA2250-50) - NXA-AVB/ETHERNET Breakout Box (**FG2254-10**) (*included only on NXT models - optional with NXD models*)

1200VG Panel Specifications (Cont.)	
Other AMX Equipment:	Several items are included within both the Video and RGB Kits. Any items not specifically included within those kits can be considered as optional accessories. • CB-TP12 (**FG031-10**): - 12" metallic conduit box for Wall Mount installations. • CC-USB (Type-A) to Mini-B 5-Wire programming cable (**FG10-5965**) • Kensington Lock Bracket (**FG2259-10**) (optional only with NXTs) • MAX-CSE MAX Video Encoder (**FG2178-70**) • MB-TP12 Universal VESA Mounting Box for 12" WallMount panels (**FG031-50**): - Black metallic VESA back box (62-0031-50) - Black plastic cover (with grommet opening) (60-0031-50) - Four Phillips pan-head screws (#8-32 x 0.50 Black) (80-0146-02) - Tie Wrap (Large) (45-0009A) (*for use with NXA-MTC/RGB*) - Twelve Under-cut Phillips-head screws (#6-32 x 0.500 Black) (80-0139) - Strain relief grommet (45-0004-03) (*for use with CA2250-50*) - Universal VESA Mount grommet (45-0032-01) (*for use with NXA-MTC/RGB*) • NXA-AVB/ETHERNET Breakout Box (**FG2254-10**) - Also comes included within Video Kits. • NXA-AVB/RGB Breakout Box (**FG2254-11**) - Also comes included within RGB Kits. • NXA-BASE/B (**FG2255**) - Wireless base for Table Top touch panels (*NXT models only*). • NXA-KLB Kensington Lock Kit for NXT panels (**FG2259-10**) (*optional only with NXT models)* • NXA-MTC/RGB Modero 10’ foot Table Top Cable (with RGB connector) (CA2250-70). ***This cable is not wall-rated for NXD models***. • NXA-PCI80211G Wireless Card (**FG2255-04**) • **NXA-RGBKIT** RGB upgrade kit for Composite Video touch panels (**FG2255-11**): - NXA-AVB/RGB Breakout Box (**FG2254-11**) - NXA-MTC/RGB Modero 10’ foot Table Top Cable (with RGB connector) (CA2250-70) - NXA-RGB internal RGB/VGA Interface Card (**FG2260**) - NXA-RGBCBL, 15-pin to 5X BNC RGB Breakout cable (**FG2250-80**) - NXT Table Top replacement I/O plate (with RGB connector opening) (62-2250-59) - NXD WallMount replacement adhesive overlay for existing I/O plate (53-2250-03) • ***Note: The NXT replacement I/O plate is a single piece which is meant to be swapped-out with the pre-existing plate shipped with Composite Video panels. On NXD panels, the RGB connector opening is pre-drilled into the I/O plate but can only be accessed by replacing the adhesive cover and maintaining the existing overlay. When upgrading NXD panels with this kit, don’t replace the NXD I/O plate, only the adhesive cover.*** • NXA-RGBCBL, 15-pin to 5X BNC RGB Breakout cable (**FG2250-80**) • NXA-RK12 (**FG2904-50**) - RackMount kit for 12" Wall Mount touch panels (NXD models only) • NXT-BP (**FG2250-10**) - Battery pack for Table Top panels. Provides 4 hours of continual operation (NXT models only)

1200VG Panel Specifications (Cont.)	
Other AMX Equipment (Cont):	• NXT-CHG (**FG2250-50**) - Battery charger for NXT-BP batteries. Charges batteries in 8 hours. • Upgrade Compact Flash (factory programmed with firmware): **NXA-CFTPV256M** - 256 MB V/VG compact flash card (**FG2116-43**) **NXA-CFTPV512M** - 512 MB V/VG compact flash card (**FG2116-44**) **NXA-CFTPV1G** - 1 GB V/VG compact flash card (**FG2116-45**)

Product Specifications (NXD-1500VG and NXT-1500VG)

The following table outlines the specifications for VG-Series of 15" Modero panels.

1500VG Panel Specifications	
Dimensions (HWD):	• NXD-1500VG (with faceplate): 14.37" x 15.20" x 3.31" (36.50 cm x 38.61 cm x 8.40 cm) • NXT-1500VG (Fully raised): 12.94" x 14.95" x 11.73" (32.87 cm x 37.97 cm x 29.78 cm) • NXT-1500VG (Fully lowered): 7.45" x 14.95" x 11.72" (18.92 cm x 37.97 cm x 29.77 cm) • CB-TP15 (conduit/wallbox): 13.48" x 14.18" x 3.49" (34.24 cm x 36.00 cm x 8.85 cm) • MB-TP15 (VESA mounting box): 14.37" x 15.19" x 3.59" (36.50 cm x 38.59 cm x 9.12 cm)
Power Requirements:	• Constant current draw: 3.7 A @ 12 VDC (stand-alone) • Startup current draw: 5.5 A @ 12 VDC (stand-alone)
Memory (factory default):	• 256 MB on-board memory • 128 MB Compact Flash (upgradeable to 1 GB factory programmed)
Weight:	• NXD-1500VG: 13.45 lbs (6.10 kg) • NXT-1500VG: 17.15 lbs (7.78 kg)
Panel LCD Parameters:	• Aspect Ratio: 4 x 3 • Brightness (luminance): 400 cd/m^2 • Channel transparency: 8-bit Alpha channel transparency • Contrast ratio: 300:1 • Display area (HW): 304.13 mm x 228.10 mm • Display colors: 16 million colors (24-bit color depth) • Dot/pixel pitch: 0.297 mm • Screen resolution (HW): 1024 x 768 • Video formats: NTSC, PAL, and SECAM (shown within variable-size video windows)
Viewing Angles:	• Vertical: + 85° (up from center) and - 85° (down from center)

1500VG Panel Specifications (Cont.)	
Features:	• Display of Component RGB/HDTV signals (done through the use of both an internal NXA-RGB card and an external NXA-AVB/RGB Breakout Box) • Enhanced hardware security (via an externally mounted Kensington Lock system) • Ethernet connectivity (*replaced ICSNet as a method of communication*) • New and improved connector compartment • Pass-thru Computer Control (*via the NXA-RGB card*) • Pre-installed 802.11g wireless card and integrated antennas *(NXT models only)* • RGB or Component input • Streaming MPEG-2 and MPEG-4 digital video support • Streaming MP2, MP3, and AAC digital audio support • Support of the latest G4 applications: G4 Computer Control, G4Web Control, Dynamo, TakeNote™, and PictureFrame™. • USB mouse/keyboard/programming ports • Wired Ethernet @10/100 and Wireless Ethernet 802.11g
Supported Audio Sample Rates:	• 48000Hz, 44100Hz, 32000Hz, 24000Hz, 22050Hz, 16000Hz, 12000Hz, 11025Hz, and 8000Hz.
Certifications:	• FCC Part 15 Class B, CE, and EN 60950
Supported Transport Protocols:	• RTP (MPEG-2/MPEG-4 Transport Stream) • UDP (MPEG-2 Transport Stream)
Supported Audio Codecs:	• Advanced Audio Coding (AAC) • MPEG Audio Level 2 (MP2) • MPEG Audio Level 3 (MP3)
Supported Video Codecs:	• MPEG-2 • MPEG-4
Button Assignments:	Button assignments can only be adjusted in TPD4 and not on the panels. • Button channel range: 1 - 4000 button push and Feedback (per address port) • Button variable text range: 1 - 4000 (per address port) • Button states range: 1 - 256 (General Button; 1 = Off State, 2 = On State) • Level range: 1 - 600 (default level value 0-255, can be set up to 1-65535) • Address port range: 1 - 100

1500VG Panel Specifications (Cont.)	
Front Panel Components:	
Light sensor:	• Photosensitive light detector for automatic adjustment of the panel brightness (a dim room results in a dimmer LCD display and a bright room results in a brighter LCD display). **Note:** The light sensor can be adjusted via the *Sensor Setup Page* section on page 158.
Motion sensor (PIR):	• Proximity Infrared Detector to wake the panel when the panel is approached. • Activation range: ± 20° vertically from center and ± 45° horizontally from center. **Note:** The motion sensor can be adjusted via the *Sensor Setup Page* section on page 158.
Front setup access button:	• Provides both access to the Setup and Calibration pages and toggles the panel between a "sleep" and "wake" state. - When wired, "sleep" status means the backlight is Off. - When battery operated, wireless "sleep" status means the touch panel base is either Off or "suspended".
Microphone:	• Used for intercom applications (***requires an optional NXA-AVB/RGB or NXA-AVB/ETHERNET Breakout Box***).
Speakers:	• Stereo output with a frequency response of 450 Hz - 7 KHz
Rear Panel Components:	(Side panel location on NXD-Wall Mount panels)
RGB connector	• This connector is only made available only by using an NXA-RGB interface card installed within the touch panel. This card is sold either as part of an RGB Kit configuration or within the NXA-RGBKIT upgrade kit for previous Video Kit fitted VG-Series panels. • Routes RGB and computer control pass-thru signals to/from a Modero panel up to 200 ft. (60.9 m). • RJ-45 connector provides RGB/Component video signals (being routed from the rear RGB/Component input ports) and touch control information to the RJ-45 RGB connector on the NXA-RGB card (installed within the panel). This connector routes VGA and Component video signals.
Audio/Video connector:	• RJ-45 connector for communication of differential audio/video signals to/from the touch panel (panel type dependant). This connector receives Composite video, Stereo (left/right) audio, and microphone audio. • Video is received via the NXA-AVB/RGB Breakout Box. Configuring video windows for playback is done using TPDesign4. • In-bound audio (from the Breakout Box) gets directed to the speakers. • Out-bound audio is sent from the on-board microphone (on the front-panel). Selecting audio files for playback is configured through TPDesign4.
Ethernet 10/100 port:	• RJ-45 port for 10/100 Mbps communication. The Ethernet port automatically negotiates the connection speed (10 Mbps or 100 Mbps), and whether to use half duplex or full duplex mode. • These panels communicate with the NetLinx Master using the ICSP protocol over Ethernet.
Ethernet 10/100 LEDs:	• LEDs show communication activity and connection information: **A**-activity - Yellow LED lights when receiving or transmitting Ethernet data packets. **L**-link - Green LED lights when the Ethernet cables are connected and terminated correctly.
PWR connector:	• 2-pin 3.5 mm mini-Phoenix connector.
Stereo Output connector:	• Stereo output through a 3.5mm mini-jack (for use with external speakers).

1500VG Panel Specifications (Cont.)	
Rear Panel Components (Cont.):	(Side panel location on NXD-Wall Mount panels)
USB connector (2):	• The two Type-A USB ports can connect up to two external keyboard or mouse devices for use with Virtual PC applications. • These ports can be used to communicate to a PC and transfer pass-thru touch control from the external devices, thru the NXA-AVB/RGB, to the PC, and then back again. Refer to the *Preparing your panel for Pass-Thru Control (using the NXA-AVB/RGB Breakout Box)* section on page 26.
Mini-USB connector:	• 5-pin Mini-USB connector used for programming, firmware update, and touch panel file transfer between the PC and the target panel. **Note**: When connecting the panel to PC using a CC-USB (or compatible) cable, be sure to power the panel On **before** attempting to connect the USB cable from the PC to the mini-USB port on the panel. Refer to the *Step 5: Confirm and View the current AMX USB device connections* section on page 100 for more information.
Operating / Storage Environment:	• Operating Temperature: 10° C (50° F) to 40° C (104° F) • Operating Humidity: 20% to 85% RH • Storage Temperature: -20° C (-4° F) to 60° C (140° F) • Storage Humidity: 5% to 85% RH
Included Accessories:	• Installation Kit for 15" NXD panels (KA2251-02): - 2-pin mini-Phoenix connector (41-5025) - Four Drywall clips (62-5924-05) and #6 - sheet metal screws - Three Phillips-head screws (#4-20 x 0.250 Black) - **Two** CAT5 Suppression Ferrites (04-0014) • Installation Kit for 15" and 17" NXT panels (KA2251-04): - 2-pin mini-Phoenix connector (41-5025) - **One** CAT5 Suppression Ferrites (04-0014) - Three Phillips-head screws (#4-20 x 0.250 Black) • **Included within the RGB Kit** (**FG**xxxx-xx**RGB**) is the following: - Modero VG Touch Panel (NXD/NXT-1200/1500/1700VG) - NXA-AVB/RGB Breakout Box (**FG2254-11**) - NXA-RGB internal RGB/VGA Interface Card (**FG2260**) - NXA-RGBCBL, 15-pin to 5X BNC RGB Breakout cable (**FG2250-80**) - NXA-MTC/RGB Modero 10' foot Table Top Cable (with RGB connector) (CA2250-70) • **Included within the Video Kit** (**FG**xxxx-x**V**) is the following: - Modero VG Touch Panel (NXD/NXT-1200/1500/1700VG) - Modero 10' foot Table Top Cable (CA2250-50) - NXA-AVB/ETHERNET Breakout Box (**FG2254-10**)

1500VG Panel Specifications (Cont.)	
Other AMX Equipment:	Several items are included within both the Video and RGB Kits. Any items not specifically included within those kits are considered optional. • CB-TP15 (**FG032-10**): 15" metallic conduit box for Wall Mount installations. • CC-USB (Type-A) to Mini-B 5-Wire programming cable (**FG10-5965**) • Kensington Lock Bracket (**FG2259-10**) (optional only with NXTs) • MAX-CSE MAX Video Encoder (**FG2178-70**) • MB-TP15 Universal VESA Mounting Box for 15" WallMount panels (**FG032-50**): - Black metallic VESA back box (62-0032-50) - Black plastic cover (with grommet opening) (60-0032-50) - Four Phillips pan-head screws (#8-32 x 0.50 Black) (80-0146-02) - Tie Wrap (Large) (45-0009A) (*for use with NXA-MTC/RGB*) - Twelve Under-cut Phillips-head screws (#6-32 x 0.500 Black) (80-0139) - Strain relief grommet (45-0004-03) (*for use with CA2250-50*) - Universal VESA Mount grommet (45-0032-01) (*for use with NXA-MTC/RGB*) • NXA-AVB/ETHERNET Breakout Box (**FG2254-10**) - Also comes included within Video Kits. • NXA-AVB/RGB Breakout Box (**FG2254-11**) - Also comes included within RGB Kits. • NXA-BASE/B (**FG2255**) - Wireless base for Table Top touch panels (NXT models only). • NXA-KLB Kensington Lock Kit for NXT panels (**FG2259-10**) (*optional only with NXT models)* • NXA-MTC/RGB Modero 10' foot Table Top Cable (with RGB connector) (CA2250-70). ***This cable is not wall-rated for NXD models***. Several items are included within both the Video and RGB Kits. Any items not specifically included within those kits are considered optional. • NXA-PCI80211G Wireless Card (**FG2255-04**) • **NXA-RGBKIT** RGB upgrade kit for Composite Video touch panels (**FG2255-11**): - NXA-AVB/RGB Breakout Box (**FG2254-11**) - NXA-MTC/RGB Modero 10' foot Table Top Cable (with RGB connector) (CA2250-70) - NXA-RGB internal RGB/VGA Interface Card (**FG2260**) - NXA-RGBCBL, 15-pin to 5X BNC RGB Breakout cable (**FG2250-80**) - NXT Table Top replacement I/O plate (with RGB connector opening) (62-2250-59) - NXD WallMount replacement adhesive overlay for existing I/O plate (53-2250-03) ***Note: The NXT replacement I/O plate is a single piece which is meant to be swapped-out with the pre-existing plate shipped with Composite Video panels. On NXD panels, the RGB connector opening is pre-drilled into the I/O plate but can only be accessed by replacing the adhesive cover and maintaining the existing overlay. When upgrading NXD panels with this kit, don't replace the NXD I/O plate, only the adhesive cover.*** • NXA-RGBCBL, 15-pin to 5X BNC RGB Breakout cable (**FG2250-80**) • NXA-RK15 (**FG2904-51**) - RackMount kit for 15" Wall Mount touch panels (NXD models only)

1500VG Panel Specifications (Cont.)	
Other AMX Equipment (Cont.):	• NXT-BP (**FG2250-10**) - Battery pack for Table Top panels. Provides 4 hours of continual operation (NXT models only) • NXT-CHG (**FG2250-50**) - Battery charger for NXT-BP batteries. Charges batteries in 8 hours. • Upgrade Compact Flash (factory programmed with firmware): **NXA-CFTPV256M** - 256 MB V/VG compact flash card (**FG2116-43**) **NXA-CFTPV512M** - 512 MB V/VG compact flash card (**FG2116-44**) **NXA-CFTPV1G** - 1 GB V/VG compact flash card (**FG2116-45**)

Product Specifications (NXD-1700VG and NXT-1700VG)

The following table outlines the specifications for VG-Series of 17" Modero panels.

1700VG Panel Specifications	
Dimensions (HWD):	• NXD-1700VG (with faceplate): 14.44" x 18.09" x 3.31" (36.68 cm x 45.95 cm x 8.41 cm) • NXT-1700VG (Fully raised): 13.29" x 17.84" x 12.44" (35.31 cm x 45.31 cm x 31.60 cm) • NXT-1700VG (Fully lowered): 6.23" x 17.84" x 12.44" (15.82 cm x 45.31 cm x 31.60 cm) • CB-TP17 (conduit/wallbox): 13.55" x 17.07" x 3.49" (34.43 cm x 43.38 cm x 8.85 cm) • MB-TP17 (VESA mounting box): 14.44" x 18.09" x 3.48" (36.68 cm x 45.95 cm x 8.84 cm)
Power Requirements:	• Constant current draw: 4.5 A @ 12 VDC (stand-alone) • Startup current draw: 6.5 A @ 12 VDC (stand-alone)
Memory (factory default):	• 256 MB on-board memory • 128 MB Compact Flash (upgradeable to 1 GB factory programmed)
Weight:	• NXD-1700VG: 18.20 lbs (8.26 kg) • NXT-1700VG: 22.00 lbs (9.98 kg)
Panel LCD Parameters:	• Aspect Ratio: 16 x 9 • Brightness: 450 cd/m^2 • Channel transparency: 8-bit Alpha channel transparency • Contrast ratio: 600:1 • Display colors: 16 million colors (24-bit color depth) • Dot/pixel pitch: 0.289 mm • Screen resolution (HV): 1280 x 768 pixels XGA-Wide @ 60 HZ frame frequency • Video formats: NTSC, PAL, and SECAM (shown within variable-size video windows)
Viewing Angles:	• Vertical: + 85° (up from center) and - 85° (down from center)

1700VG Panel Specifications (Cont.)	
Features:	• Display of Component RGB/HDTV signals (done through the use of both an internal NXA-RGB card and an external NXA-AVB/RGB Breakout Box) • Enhanced hardware security (via an externally mounted Kensington Lock system) • Ethernet connectivity (*replaced ICSNet as a method of communication*) • New and improved connector compartment • Pass-thru Computer Control (*via the NXA-RGB card*) • Pre-installed 802.11g wireless card and integrated antennas *(NXT models only)* • RGB or Component input • Streaming MPEG-2 and MPEG-4 digital video support • Streaming MP2, MP3, and AAC digital audio support • Support of the latest G4 applications: G4 Computer Control, G4Web Control, Dynamo, TakeNote™, and PictureFrame™. • USB mouse/keyboard/programming ports • Wired Ethernet @10/100 and Wireless Ethernet 802.11g
Supported Audio Sample Rates:	• 48000Hz, 44100Hz, 32000Hz, 24000Hz, 22050Hz, 16000Hz, 12000Hz, 11025Hz, and 8000Hz.
Certifications:	• FCC Part 15 Class B, CE, and EN 60950
Supported Transport Protocols:	• RTP (MPEG-2/MPEG-4 Transport Stream) • UDP (MPEG-2 Transport Stream)
Supported Audio Codecs:	• Advanced Audio Coding (AAC) • MPEG Audio Level 2 (MP2) • MPEG Audio Level 3 (MP3)
Supported Video Codecs:	• MPEG-2 • MPEG-4
Button Assignments:	Button assignments can only be adjusted in TPD4 and not on the panels. • Button channel range: 1 - 4000 button push and Feedback (per address port) • Button variable text range: 1 - 4000 (per address port) • Button states range: 1 - 256 (General Button; 1 = Off State, 2 = On State) • Level range: 1 - 600 (default level value 0-255, can be set up to 1-65535) • Address port range: 1 - 100

1700VG Panel Specifications (Cont.)	
Front Panel Components:	
Light sensor:	• Photosensitive light detector for automatic adjustment of the panel brightness (a dim room results in a dimmer LCD display and a bright room results in a brighter LCD display). **Note:** The light sensor can be adjusted via the *Sensor Setup Page* section on page 158.
Motion sensor (PIR):	• Proximity Infrared Detector to wake the panel when the panel is approached. • Activation range: ± 20° vertically from center and ± 45° horizontally from center. **Note:** The motion sensor can be adjusted via the *Sensor Setup Page* section on page 158.
Front setup access button:	• Provides both access to the Setup and Calibration pages and toggles the panel between a "sleep" and "wake" state. - When wired, "sleep" status means the backlight is Off. - When battery operated, wireless "sleep" status means the touch panel base is either Off or "suspended".
Microphone:	• Used for intercom applications (***requires an optional NXA-AVB/RGB or NXA-AVB/ETHERNET Breakout Box***).
Speakers:	• Stereo output with a frequency response of 450 Hz - 7 KHz
Rear Panel Components:	(Side panel location on NXD-Wall Mount panels)
RGB connector	• This connector is only made available only by using an NXA-RGB interface card installed within the touch panel. This card is sold either as part of an RGB Kit configuration or within the NXA-RGBKIT upgrade kit for previous Video Kit fitted VG-Series panels. • Routes RGB and computer control pass-thru signals to/from a Modero panel up to 200 ft. (60.9 m). • RJ-45 connector provides RGB/Component video signals (being routed from the rear RGB/Component input ports) and touch control information to the RJ-45 RGB connector on the NXA-RGB card (installed within the panel). This connector routes VGA and Component video signals.
Audio/Video connector:	• RJ-45 connector for communication of differential audio/video signals to/from the touch panel (panel type dependant). This connector receives Composite video, Stereo (left/right) audio, and microphone audio. • Video is received via the NXA-AVB/RGB Breakout Box. Configuring video windows for playback is done using TPDesign4. • In-bound audio (from the Breakout Box) gets directed to the speakers. • Out-bound audio is sent from the on-board microphone (on the front-panel). Selecting audio files for playback is configured through TPDesign4.
Ethernet 10/100 port:	• RJ-45 port for 10/100 Mbps communication. The Ethernet port automatically negotiates the connection speed (10 Mbps or 100 Mbps), and whether to use half duplex or full duplex mode. • These panels communicate with the NetLinx Master using the ICSP protocol over Ethernet.
PWR connector:	• 2-pin 3.5 mm mini-Phoenix connector.
Stereo Output connector:	• Stereo output through a 3.5mm mini-jack (for use with external speakers).
Ethernet 10/100 LEDs:	• LEDs show communication activity and connection information: **A**-activity - Yellow LED lights when receiving or transmitting Ethernet data packets. **L**-link - Green LED lights when the Ethernet cables are connected and terminated correctly.

1700VG Panel Specifications (Cont.)	
Rear Panel Components (Cont.):	(Side panel location on NXD-Wall Mount panels)
USB connector (2):	• The two Type-A USB ports can connect up to two external keyboard or mouse devices for use with Virtual PC applications. • These ports can be used to communicate to a PC and transfer pass-thru touch control from the external devices, thru the NXA-AVB/RGB, to the PC, and then back again. Refer to the *Preparing your panel for Pass-Thru Control (using the NXA-AVB/RGB Breakout Box)* section on page 26.
Mini-USB connector:	• 5-pin Mini-USB connector used for programming, firmware update, and touch panel file transfer between the PC and the target panel. **Note**: When connecting the panel to PC using a CC-USB (or compatible) cable, be sure to power the panel On **before** attempting to connect the USB cable from the PC to the mini-USB port on the panel. Refer to the *Step 5: Confirm and View the current AMX USB device connections* section on page 100 for more information.
Operating / Storage Environment:	• Operating Temperature: 10° C (50° F) to 40° C (104° F) • Operating Humidity: 20% to 85% RH • Storage Temperature: -20° C (-4° F) to 60° C (140° F) • Storage Humidity: 5% to 85% RH
Included Accessories:	• Installation Kit for 12" and 17" NXD panels (KA2251-01): - 2-pin mini-Phoenix connector (41-5025) - Four Drywall clips (62-5924-05) and #6 - sheet metal screws - **One** CAT5 Suppression Ferrites (04-0014) - Three Phillips-head screws (#4-20 x 0.250 Black) • Installation Kit for 15" and 17" NXT panels (KA2251-04): - 2-pin mini-Phoenix connector (41-5025) - **One** CAT5 Suppression Ferrites (04-0014) - Three Phillips-head screws (#4-20 x 0.250 Black) • **Included within the RGB Kit** (**FG**xxxx-xx**RGB**) is the following: - Modero VG Touch Panel (NXD/NXT-1200/1500/1700VG) - NXA-AVB/RGB Breakout Box (**FG2254-11**) - NXA-RGB internal RGB/VGA Interface Card (**FG2260**) - NXA-RGBCBL, 15-pin to 5X BNC RGB Breakout cable (**FG2250-80**) - NXA-MTC/RGB Modero 10' foot Table Top Cable (with RGB connector) (CA2250-70) • **Included within the Video Kit** (**FG**xxxx-x**V**) is the following: - Modero VG Touch Panel (NXD/NXT-1200/1500/1700VG) - Modero 10' foot Table Top Cable (CA2250-50) - NXA-AVB/ETHERNET Breakout Box (**FG2254-10**)

1700VG Panel Specifications (Cont.)	
Other AMX Equipment:	Several items are included within both the Video and RGB Kits. Any items not specifically included within those kits are considered optional. • CB-TP17 (**FG034-10**): 17" metallic conduit box for Wall Mount installations. • CC-USB (Type-A) to Mini-B 5-Wire programming cable (**FG10-5965**) • Kensington Lock Bracket (**FG2259-10**) (optional only with NXTs) • MAX-CSE MAX Video Encoder (**FG2178-70**) • MB-TP17 Universal VESA Mounting Box for 17" WallMount panels (**FG033-50**): - Black metallic VESA back box (62-0033-50) - Black plastic cover (with grommet opening) (60-0033-50) - Four Phillips pan-head screws (#8-32 x 0.50 Black) (80-0146-02) - Tie Wrap (Large) (45-0009A) (*for use with NXA-MTC/RGB*) - Ten Under-cut Phillips-head screws (#6-32 x 0.500 Black) (80-0139) - Strain relief grommet (45-0004-03) (*for use with CA2250-50*) - Universal VESA Mount grommet (45-0032-01) (*for use with NXA-MTC/RGB*) • NXA-AVB/ETHERNET Breakout Box (**FG2254-10**) - Also comes included within Video Kits. • NXA-AVB/RGB Breakout Box (**FG2254-11**) - Also comes included within RGB Kits. • NXA-BASE/B (**FG2255**) - Wireless base for Table Top touch panels (NXT models only) • NXA-KLB Kensington Lock Kit for NXT panels (**FG2259-10**) (*optional only with NXT models)* • NXA-MTC/RGB Modero 10' foot Table Top Cable (with RGB connector) (CA2250-70). ***This cable is not wall-rated for NXD models***. • NXA-PCI80211G Wireless Card (**FG2255-04**) • **NXA-RGBKIT** RGB upgrade kit for Composite Video touch panels (**FG2255-11**): - NXA-AVB/RGB Breakout Box (**FG2254-11**) - NXA-MTC/RGB Modero 10' foot Table Top Cable (with RGB connector) (CA2250-70) - NXA-RGB internal RGB/VGA Interface Card (**FG2260**) - NXA-RGBCBL, 15-pin to 5X BNC RGB Breakout cable (**FG2250-80**) - NXT Table Top replacement I/O plate (with RGB connector opening) (62-2250-59) - NXD WallMount replacement adhesive overlay for existing I/O plate (53-2250-03) ***Note: The NXT replacement I/O plate is a single piece which is meant to be swapped-out with the pre-existing plate shipped with Composite Video panels. On NXD panels, the RGB connector opening is pre-drilled into the I/O plate but can only be accessed by replacing the adhesive cover and maintaining the existing overlay. When upgrading NXD panels with this kit, don't replace the NXD I/O plate, only the adhesive cover.*** • NXA-RGBCBL, 15-pin to 5X BNC RGB Breakout cable (**FG2250-80**) • NXA-RK17 (**FG2904-52**) - RackMount kit for 17" Wall Mount touch panels (NXD models only). • NXT-BP (**FG2250-10**) - Battery pack for Table Top panels. Provides 4 hours of continual operation (NXT models only) • NXT-CHG (**FG2250-50**) - Battery charger for NXT-BP batteries. Charges batteries in 8 hours.

1700VG Panel Specifications (Cont.)	
Other AMX Equipment (Cont.):	• Upgrade Compact Flash (factory programmed with firmware): **NXA-CFTPV256M** - 256 MB V/VG compact flash card (**FG2116-43**) **NXA-CFTPV512M** - 512 MB V/VG compact flash card (**FG2116-44**) **NXA-CFTPV1G** - 1 GB V/VG compact flash card (**FG2116-45**)

VG-Series Modero Connectors

FIG. 1 shows the connectors on the VG-Series Modero panels.

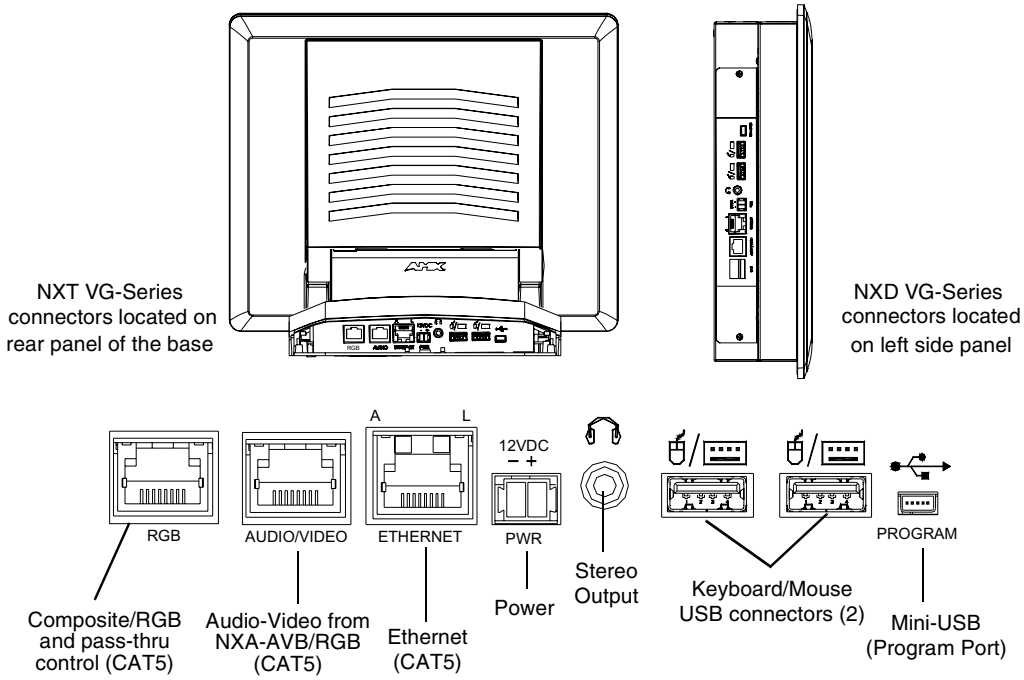

FIG. 1 Connector layout on sample VG-Series Video Touch Panels (RGB connector available with RGB Kit)

Connecting and Using USB Input Devices

These panels can have up to two USB-capable input devices connected for use both on its different firmware and TPD4 panel pages. These input devices can consist of a keyboard or mouse.

NOTE

USB-connected input devices are detected and recognized by the panel upon connection. Refer to the ***Configuring and Using USB with a Virtual Master*** **section on page 95** *for more information on using a USB connection.*

1. Insert the input device USB connectors into the appropriate USB connector on the panel.
2. Press the on-screen **Reboot** button (Protected Setup page) to save any changes and restart the panel.
3. After the panel splash-screen disappears:
   - If a USB mouse has been connected, a mouse cursor appears on the panel screen and its location corresponds to the mouse cursor position sent by the external USB mouse.
   - If a USB keyboard has been connected, only on-screen keyboards and keypads will reflect any external keystrokes sent from the external USB keyboard.

Cleaning the Touch Overlay

You should clean the touch screen overlay after each day's use.

Always use clean cotton cloths and a spray bottle containing water.

Touch Panel Accessories

Overview

The following section outlines and describes both the included accessories and other AMX equipment available for both the Video and Video/RGB models of touch panels.

WARNING

When working with firmware, it is important to note that version 1.xx of firmware should only be loaded onto box's using 1.xx series firmware. The version 2.xx firmware should only be loaded onto box's running 2.xx series firmware.
To confirm the box's current firmware version, you can either navigate to the BOB Version field on the RGB Adjustment page or launch NetLinx Studio and open the Online Tree tab.
*Modero-VG touch panel firmware 2.60.**27 or higher** is required to download v2.xx firmware into the break out box.*

NXA-AVB/RGB Breakout Box (FG2254-11)

The NXA-AVB/RGB Ethernet/RGB Breakout Box allows any of AMX's VG-Series Modero Touch Panels to accept and display both RGB or HDTV Component signals directly from an external source. Through this single connection point, the 12", 15" and 17" VG-Series Modero panels experience comprehensive connectivity for audio/video distribution, power, Ethernet connectivity, and RGB. FIG. 2 shows the NXA-AVB/RGB Breakout Box.

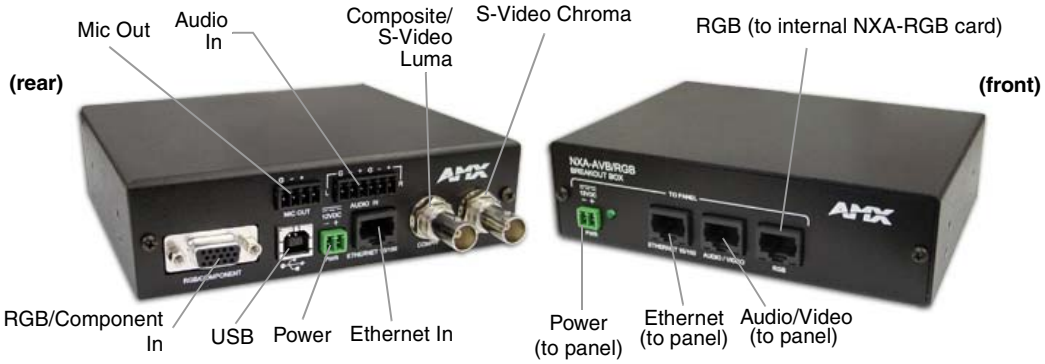

FIG. 2 NXA-AVB/RGB Breakout Box (front and rear views)

The NXA-AVB/RGB Breakout Box is available either separately or as part of AMX's exclusive RGB Kit (NXA-RGBKIT). The RGB Breakout Box (combined with the panel's internal NXA-RGB interface card) allows the Modero to accept and display high-bandwidth and high-quality RGB and HDTV Component video signals. The NXA-AVB/RGB stands out amongst all previous AMX Breakout Boxes in that it is firmware upgradeable, feeds high quality video signals via RJ-45 cables, and provides keyboard and mouse pass-through functionality via the rear USB connector.

WARNING

*If the PWR/Activity LED (on the front of the unit) is blinking rapidly, this indicates there is currently an activity in progress (such as a download). **DO NOT** unplug the unit during a download as long as the LED is blinking in this manner.*

Product Specifications

NXA-AVB/RGB Specifications	
Dimensions (HWD):	• 1.52" x 5.54" x 4.93" (3.86 cm x 14.07 cm x 12.52 cm) • Width when attached to mounting ears: 6.65" (16.86 cm)
Power Consumption:	• 240mA • Routed through AVB using a 12 VDC-compliant power supply
Certifications:	• FCC Part 15 Class B, CE, and EN60950
Features:	• Accepts either Composite or S-Video inputs (1200V or VG-Series panels) • Accepts RGB or Component inputs • Integrates USB Type-B connector for keyboard and mouse communication from the panel through to the PC • Accepts 6-wire stereo audio with 4-wire microphone output • Provides video/audio distribution to the video-capable panels over CAT5 cable up to 200 ft. (60.9 m) • Provides audio distribution to audio-capable touch panels over a CAT5 cable up to 200 ft. (60.9m) • Routes RGB and computer control pass-thru signals to/from a Modero panel up to 200 ft. (60.9 m)
Availability:	• This unit is included with VG-Series panels using RGB Kits and as part of the NXA-RGBKIT upgrade kit.
Front Components:	• 2-pin 3.5 mm mini-Phoenix connector for power to the touch panel • Green LED provides an indication of both power and activity - 1 blink/second indicates the unit is powered and active - Multiple blinks/second indicates there is currently an activity in progress, such as a download. Do not unplug the unit during this process. • RJ-45 connector provides Ethernet signals to the touch panel • RJ-45 connector provides differential audio/video signals between the touch panel and the box. This connector routes Composite video, Stereo (left/right) audio, and microphone audio. • RJ-45 connector provides RGB/Component video signals (being routed from the rear RGB/Component input ports) and touch control information to the RJ-45 RGB connector on the NXA-RGB card (installed within the panel). This connector routes VGA and Component video signals.
Rear Components:	• 4-pin 3.5 mm mini-Phoenix connector for out-bound audio (from microphone) • 6-pin 3.5 mm mini-Phoenix connector for in-bound (left/right channel) audio • HD-15 D-Sub RGB/VGA/Component connector used to route an RGB (computer) or Component (DVD/HDTV) signal to a target Modero panel (using the internal NXA-RGB card). • Type-B USB device port input connector for pass-thru computer control (by connecting an external keyboard or mouse device for use with different PC applications). The touch signals are routed to the touch panel via the front RGB RJ-45 connector. Touch information is sent to and from the panel via this two-way connector. • 2-pin 3.5 mm mini-Phoenix connector for in-bound power (from a 12 VDC-compliant power supply) • RJ-45 connector for Ethernet input from the control system • BNC connector (female) for Composite or Chroma (COMP/Y). Composite NTSC, PAL and SECAM video is provided via this connector. • BNC connector (female) for luminance (C).
Included Accessories:	• 4-pin 3.5 mm mini-Phoenix connector (41-5047) • 6-pin 3.5 mm mini-Phoenix connector (41-5063) • Rack Mount Kit (KA2250-40) with mounting bracket (62-2254-02) • Two 2-pin 3.5 mm mini-Phoenix connectors (41-5025)

NXA-AVB/RGB Specifications (Cont.)	
Other AMX Equipment:	• AC-RK Equipment Rack Kit (**FG575**) • NXA-MTC/RGB Combo Table Top cable (CA2250-70) • NXA-RGBCBL, 15-pin to 5X BNC RGB Breakout cable (**FG2250-80**)

RGB RJ-45 connection and wiring information

This RJ-45 connector is used to route the signals connected to the RGB / Component input port on the rear of the AVB/RGB Breakout Box to the VG-Series Modero panel. Standard CAT5 cable can be used for this connection with short cable runs under 50 feet (15.24 m). For cable runs over 50 feet (15.24 m), AMX recommends using the Belden Brilliance VideoTwist 7987. This Belden cable is not CAT5 compliant, but is designed to control skew between the red, green, and blue video signals. Therefore, for longer cable runs, the video quality will be much higher using the Belden VideoTwist 7987 cable versus standard CAT5 (or other Ethernet compliant cables). The pinout of this RGB connector is given in the table below.

NOTE

The Belden cable only adjusts for RGB skew but may still need to be configured properly for cable length by using the Cable Variance setting on the RGB Adjustment page (Video Adjustment - RGB Adjustment Page section on page 142*).*

RGB RJ-45 Connector Pinouts and Signals				
Pin	Color	Function	Polarity	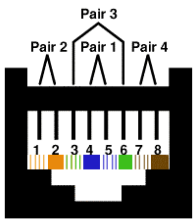 TIA 568B
1	Orange-White	Blue Video	-	
2	Orange	Blue Video	+	
3	Green-White	Data (bidirectional)	-	
4	Blue	Green Video	-	
5	Blue-White	Green Video	+	
6	Green	Data (bidirectional)	+	
7	Brown-White	Red Video	-	
8	Brown	Red Video	+	

NOTE

It is important that the correct pairing is observed.

Using the HD-15 high-density connector

Connect the RGB/Comp source equipment HD-15 (male) connector to the RGB/COMPONENT HD-15 high-density connector (female) on the rear of the NXA-AVB/RGB Breakout Box. The following table below lists the HD-15 connector pinouts.

HD-15 Connector Pinouts

Pin	Signal	Function
1	Red	Red signals/Cr
2	Green	Green signals/Y
3	Blue	Blue signals/Cb
4	N/A	Not used
5	GND	Signal Ground
6	RAGND	Red analog ground
7	GAGND	Green analog ground
8	BAGND	Blue analog ground
9	N/A	Not used
10	SAGND	Synchronization analog ground
11	N/A	Not used
12	N/A	Not used
13	HSYNC	Horizontal synchronization signal
14	VSYNC	Vertical synchronization signal
15	N/A	Not used

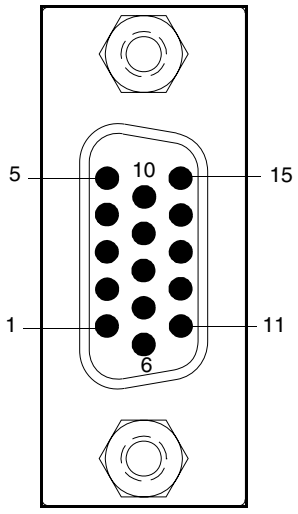

HD-15 (male) connector

Installing the NXA-AVB/RGB

A 12 VDC-compliant power supply can indirectly provide power to a Modero panel by routing power through the NXA-AVB/RGB Breakout Box. FIG. 3 shows a sample wiring configuration using both an indirect or direct power connection for a VG-Series Modero panel.

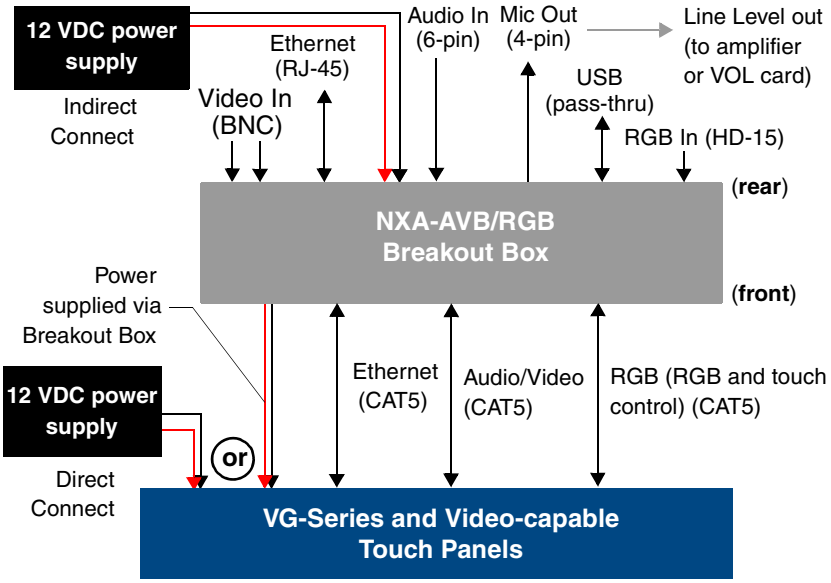

FIG. 3 Sample Wiring configuration using the NXA-AVB/RGB Breakout Box

NOTE

The breakout box unit can be mounted on either a horizontal flat surface or into an equipment rack (by removing the front screws and attaching it to an optional AC-RK). The power supply being used on the NXA-AVB/RGB is dependant on the power requirements of the target touch panel.

Use the NXA-MTC/RGB Combo Table Top cable (CA2250-70) to provide both communication and 10/100 network connectivity between the panel, NXA-AVB/RGB, NetLinx Master, and the network.

Wiring the NXA-AVB/RGB connectors and cables

The inputs and outputs on this breakout box are separated into front and rear connectors. The rear connectors are used to input external signals. The front connectors are used to communicate signals between the NXA-AVB/RGB and a target Modero panel.

The front RGB RJ-45 connector both receives one-way RGB video signals from the breakout box and uses this same connector as a two-way communication point for pass-thru control data from the panel's USB connector through to the communicating computer. The NXA-MTC/RGB Combo Table Top cable (CA2250-70) provides an RJ-45 Ethernet connector for data, an RJ-45 connector for Audio/Video, and a third RJ-45 connector for both pass-thru control and RGB signal feed to the panel's internal NXA-RGB input card. FIG. 4 provides a layout of the wiring connection both into and from the breakout box.

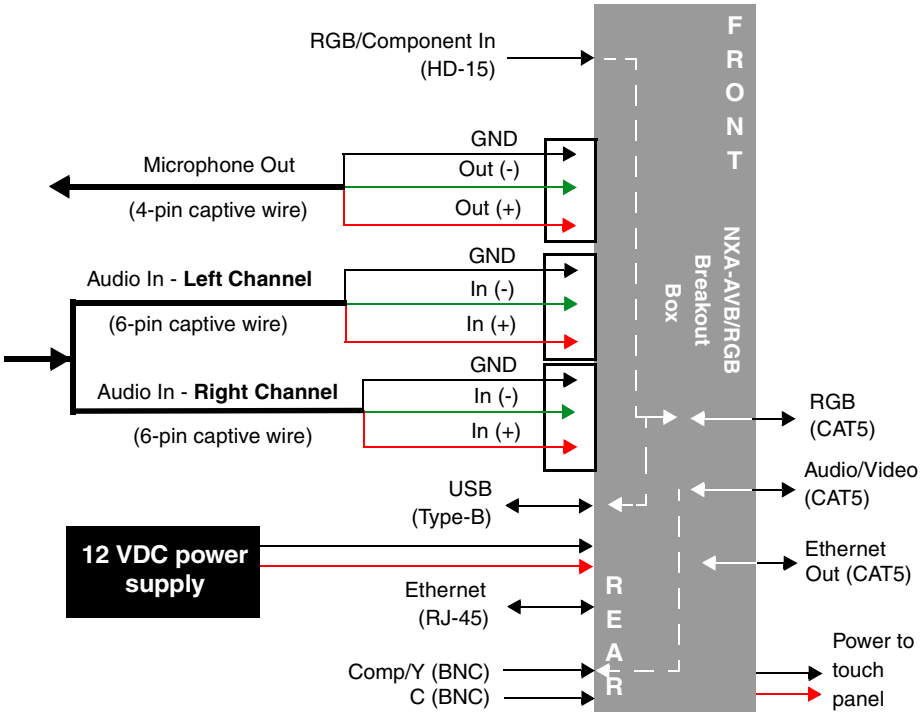

FIG. 4 NXA-AVB/RGB Breakout Box connector wiring diagram

The rear-panel wiring connections are described below (from left to right):

- **RGB/COMPONENT In:** 15-pin HD 15 video connector used to feed in signals from an outside video source, through the box, and then to NXA-RGB card on the panel. This signal can also be fed from a BNC connector by using the optional NXA-RGBCBL, 15-pin to 5X BNC RGB Breakout cable (**FG2250-80**).

- **MIC OUT:** 4-pin mini-Phoenix connector, divided into GND, OUT-, and OUT+ terminal connectors.

  An example of this cable is to strip the terminal ends of a 3.5mm mini-jack and insert them into their respective locations on the Mic Out port. This signal can be fed as a Line Level In to either an amplifier or an AMX VOL card.
  Either a balanced (+, -, and GND) or unbalanced (+ and GND) audio signal can be connected to this output.

- **AUDIO IN:** 6-pin 3.5 mm mini-Phoenix connector, divided into left and right audio channels. Each channel is divided into GND, IN+, and IN- terminal cable connectors (2 sets of 3 for each channel).

  An example of this cable is to strip the ends of 2 RCA audio cables and insert them into their respective locations on the Audio In port.
  Either a balanced (+, -, and GND) or unbalanced (+ and GND) audio signal can be connected to this input.

- **USB:** Type-B USB device port input connector for pass-thru computer control. This port provides two-way signal between the keyboard and mouse (connected to the rear/side USB connectors on the Modero panel) through the front RGB connector on the breakout box, out the rear USB Type-B connector, and then to/from the connected computer.

- **PWR:** 2-pin 3.5 mm mini-Phoenix connector that connects to a 12 VDC-compliant power supply. This port can be used to provide power to a Modero panel by sending it through the NXA-AVB/RGB (rear power connector through to the front power connector).

- **ETHERNET:** RJ-45 connector routes data to the G4 panel through the front Ethernet port. These connections use a standard CAT5 Ethernet cable to provide communication between the target panel, box, and Master.

- **Video In BNCs:** Feeds either Composite/S-Video Luma or S-Video Chroma signals into the NXA-AVB/RGB. This feed is then redirected out to a Modero panel through the front Audio/Video CAT5 port.

  Note: Although the NXA-AVB/RGB Breakout Box can accept either a Composite or S-Video input signal type, only one input source can be used at a time. **This unit does not auto-detect the incoming signal type**. Using S-Video would require a cable split and a simultaneous connection to both the COMP/Y and C connectors (which would prevent an additional Composite signal from being fed into the unit). A user should not try to connect two Composite video signal cables to the COMP/Y and C connectors.

Wiring the NXA-AVB/RGB for Unbalanced Audio

Most domestic audio equipment has unbalanced audio inputs and outputs. This means that the audio output (left, right, or mono) appears on a single wire, and is referenced to "0 V" or "Ground". Typical connectors used are RCA "phono" connectors, DIN plugs/sockets, and 0.25" (6.3mm) or 3.5mm jack plugs/sockets.

Unbalanced audio is adequate for most domestic environments and for line-level signals in a typical broadcast studio. Problems may occur if the signals are carried over long distances, especially if the source and destination have separate main supplies. Use the following wiring drawing (FIG. 5) to configure an unbalanced audio connection.

When using unbalanced audio for the AUDIO IN connector (FIG. 5), the "-" and the "GND" terminals should be connected together and then connected to the GND of the unbalance audio signal. When connecting to an unbalanced audio input from the MIC OUT connector (FIG. 5), wire the "+" terminal to the signal input, and the "GND" terminal to the signal ground.

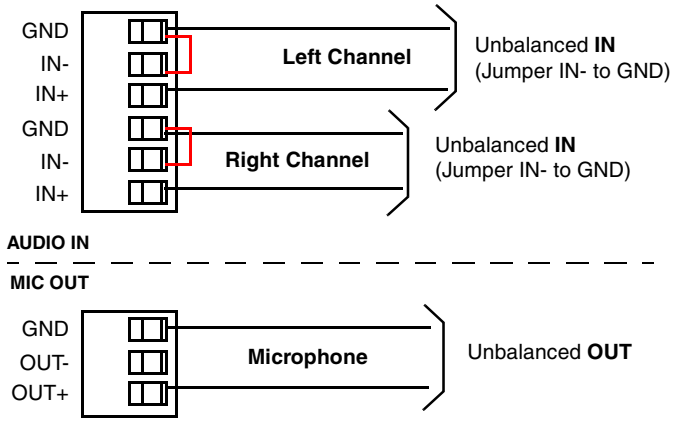

FIG. 5 Wiring the rear AUDIO IN and MIC OUT for use with Unbalanced Audio

Wiring the NXA-AVB/RGB for Balanced Audio

Professional audio equipment will often use balanced audio inputs and outputs, usually on 3-pin "XLR" connectors. A balanced audio signal consists of a pair of wires carrying the audio signal in anti-phase with each other (if one wire carries a positive voltage, the other carries an equal and opposite negative voltage).

The advantage of balanced audio over unbalanced audio is its ability to reject external interference added as the signal is carried over the wire. The receiving equipment takes the voltage difference between the two wires as the input signal. Interference will usually get added to both wires equally, and so gets cancelled by the receiving equipment.

The 3 wires used in a typical XLR lead are often referred to as Ground, Live (Hot) and Return (Cold). "Live" and "Return" carry the "in-phase" and "out-of-phase" versions of the audio respectively. The pins of the XLR plug/socket are as follows:

- X = Ground
- L = Live (Hot)
- R = Return (Cold)

When connecting the MIC OUT connector to a balanced audio input (FIG. 6), use all three audio terminals (+, -, and GND), then connect the "+" terminal to the "live" signal, the "-" terminal to the "return" signal, and the "GND" terminal to the ground signal.

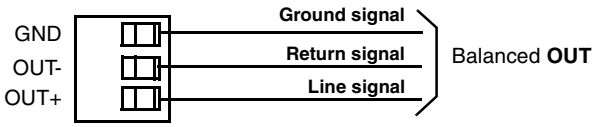

FIG. 6 Wiring the rear MIC OUT connector for use with Balanced Audio

Preparing your panel for Pass-Thru Control (using the NXA-AVB/RGB Breakout Box)

Pass-thru control allows the NXA-AVB/RGB to act as a control bridge between the USB input signals (*coming from a touch panel via the NXA-RGB card*) and a target computer.

- The pass-thru is routed from the USB Input device, through the panel, then through internal NXA-RGB card and to the front RGB RJ-45 connector on the NXA-AVB/RGB. From there the signal is routed through the rear USB port on the breakout box and finally to the target PC. Refer to FIG. 7 for a visual representation.

NOTE

Pass-thru must be enabled to control devices through the NXA-RGB card when using USB-compatible control devices.
Refer to the following commands to enable pass-thru on the RGB card: ^MPS on page 225 for Mouse pass-thru and ^KPS on page 225 for the keyboard pass-thru.

The two available USB input connections on the touch panel can be used to provide either Keyboard and/or Mouse signals between the PC and the panel. You are no longer limited to one mouse and one keyboard. You can use USB hubs and multiple mice/keyboards in any configuration.

When setting up pass-thru computer control its important to focus on the following areas:

1. Properly connect the NXA-AVB/RGB to both a target PC and touch panel using the appropriate cabling. Refer to the following *Wiring for Pass-Thru Computer Control* section on page 27 for more detailed information.
2. Enable pass-thru via the use of either the `^MPS` or `^KPS` commands (**page 225**).
3. Set up a touch panel page (via TPDesign4) with the necessary **Video Fill >** (**Component/RGB video**) properties selected.

   Video Fill allows you to select from a drop-down list of video formats that are supported by the touch panel specified in your project. VG-Series Modero panels (1200VG, 1500VG and 1700VG) support Composite video, **Component/RGB video**, and Streaming video formats.

   - Selecting Component/RGB allows you to route a video signal from your computer through the NXA-AVB/RGB and then to the panel.
   - Selecting Streaming Video requires that you enter the URL or IP Address of the server that will provide the video stream.

NOTE

Note that Streaming Source is only available as a Video Fill option if the project specifies a touch panel that supports streaming video (NXD/NXT-1200VG, NXD/NXT-1500VG, and NXD/NXT-1700VG only).

4. Set up a touch panel page (via TPDesign4) with the necessary **Video Touch Pass-thru** property (**yes**) selected.

   - Video Pass-Thru allows you to pass touch/control information from a touch input device (touch panel, mouse or keyboard) through an NXA-AVB/RGB to a controlled device with video-out capabilities. Select **Yes** from the drop-down menu to enable video pass-thru (disabled by default). This feature is also used in conjunction with the `^MPS` (mouse pass-thru) and `^KPS` (keyboard pass-thru) commands.

Wiring for Pass-Thru Computer Control

1. Discharge any acquired static electricity by touching a grounded metal object.
2. Turn-off your computer and remove any installed power cables. Review FIG. 7 for an overview of the overall wiring configuration surrounding pass-thru control.

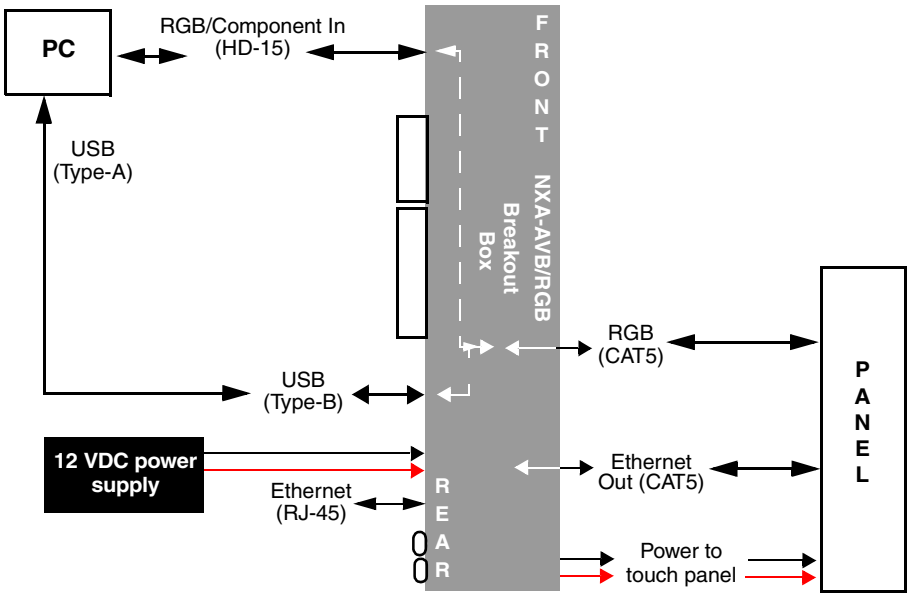

FIG. 7 Pass-thru control wiring configuration

3. Use an HD-15 video cable to create a connection between the computer's video output connector and the HD-15 D-Sub RGB/VGA/Component connector on the rear of the NXA-AVB/RGB. This HD-15 D-Sub RGB/VGA/Component connector on the breakout box is used to route an RGB (computer) or Component (DVD/HDTV) signal to a target Modero panel (using the internal NXA-RGB card).
4. Use a Type-A to Type-B USB cable to create a connection from USB connector on the computer to the rear Type-B USB device port input connector on the rear of the NXA-AVB/RGB. This connection routes pass-thru computer control from the touch panel, to the front RGB RJ-45 connector, and then through the rear USB port to the PC. Touch information is sent to and from the panel via this two-way connector.
5. Verify the panel has been configured to communicate by connecting an RJ-45 10/100baseT Ethernet connector from the rear Ethernet port on the breakout box to a valid Ethernet Hub.
6. Connect the incoming power connector to the 12 VDC power connector on the rear of the box. **DO NOT CONNECT POWER UNTIL THE UNIT IS COMPLETELY INSTALLED**.
7. Use the NXA-MTC/RGB to create a connection between the NXA-AVB/RGB and the target VG-Series touch panel. Refer to the following *NXA-MTC/RGB Combo Table Top Cable (CA2250-70)* section on page 28 for more detailed cable information.
8. Connect a USB mouse/keyboard to the available connectors on the target touch panel.
9. Verify a proper installation of all of the RJ-45 and power connectors between the target touch panel and breakout box.
10. Verify a proper installation of all of the RJ-45, HD-15, and power connectors between the rear of the breakout box and the computer.
11. Provide power to both the computer and the NXA-AVB/RGB Breakout Box.

NXA-MTC/RGB Combo Table Top Cable (CA2250-70)

The VG-Series of Modero Touch Panels (fitted with either an RGB Kit (Video/RGB) or upgraded with an optional NXA-RGBKIT (**FG2255-11**)) are shipped with a 10' (3.048 m) NXA-MTC/RGB Modero cable (CA2250-70) that supports both RGB, Ethernet, Audio/Video, and Power connections. This cable (FIG. 8) comes terminated with three RJ45 connectors (Ethernet/AV/RGB) and a single 2-pin 3.5 mm mini-Phoenix connector (for power).

FIG. 8 10 Foot NXA-MTC/RGB Combo Table Top Cable

Product Specifications

NXA-MTC/RGB Specifications	
Dimensions (HWD):	• Length: 10 feet (3.048 m)
Connectors:	• Ethernet RJ-45 connector (White) routes Ethernet signals between the touch panel and the AVB/RGB Breakout Box. • Audio/Video RJ-45 connector (Black) routes differential audio/video signals between the touch panel and the box. • RGB RJ-45 connector (Blue) routes RGB/Component video signals and touch control information to the RJ-45 RGB connector on the NXA-RGB card (installed within the panel). This connector routes VGA and Component video signals between the panel and the AVB/RGB Breakout Box. • 2-pin 3.5 mm mini-Phoenix power connector to route power from the external breakout box to the target panel.
Included Accessories:	• One NXA-MTC/RGB Combo Table Top Cable (CA2250-70) • One black tie wrap (used to join the Ethernet and Power cables)
Other AMX Equipment:	***Note**: All 1200V, VG-Series, and CV10 Table Top panels routing an Audio/Video signal from a breakout box must use the appropriate number of CAT5 Suppression Ferrites which are included as part of installation kits accompanying your particular Modero panel.* Each of the following Installation Kits come with the appropriate number of CAT5 Suppression Ferrites. **These ferrites must be installed onto their appropriate locations.** • Installation Kit for 12" and 17" NXD panels (KA2251-01): - 2-pin mini-Phoenix connector (41-5025) - Three Phillips-head screws (#4-20 x 0.250 Black) (80-0114-08) - **One** CAT5 Suppression Ferrites (04-0014) - Four Drywall clips (62-5924-05) and #6 -metal strips (80-0192) • Installation Kit for 15" NXD panels (KA2251-02): - 2-pin mini-Phoenix connector (41-5025) - Three Phillips-head screws (#4-20 x 0.250 Black) (80-0114-08) - **Two** CAT5 Suppression Ferrites (04-0014) - Four Drywall clips (62-5924-05) and #6 -metal strips (80-0192)

NXA-MTC/RGB Specifications (Cont.)	
Other AMX Equipment:	• Installation Kit for 15" NXD panels (KA2251-02): - 2-pin mini-Phoenix connector (41-5025) - Three Phillips-head screws (#4-20 x 0.250 Black) (80-0114-08) - **Two** CAT5 Suppression Ferrites (04-0014) - Four Drywall clips (62-5924-05) and #6 -metal strips (80-0192) • Installation Kit for 12" NXT panels (KA2251-03): - 2-pin mini-Phoenix connector (41-5025) - Three Phillips-head screws (#4-20 x 0.250 Black) (80-0114-08) - **Two** CAT5 Suppression Ferrites (04-0014) • Installation Kit for 15" and 17" NXT panels (KA2251-04): - 2-pin mini-Phoenix connector (41-5025) - Three Phillips-head screws (#4-20 x 0.250 Black) (80-0114-08) - **One** CAT5 Suppression Ferrites (04-0014) • Installation Kit for 10" NXT panels (KA2259-01): - 2-pin 3.5 mm mini-Phoenix connector (41-5025) - **One** CAT5 Table Top Suppression Ferrite (04-0014) - **One** cylindrical CAT5 USB Mouse Suppression Ferrite (04-0018-SA)

Associated Touch Panels (where used)	
FG2251-61RGB	NXD-1200VG RGB KIT, 12" MODERO WALLMOUNT RGB KIT
FG2250-61RGB	NXT-1200VG RGBKIT, 12" MODERO TABLETOP RGB KIT
FG2253-61RGB	NXD-1500VG RGB KIT, 15" MODERO WALLMOUNT RGB KIT
FG2252-61RGB	NXT-1500VG RGB KIT, 15" MODERO TABLETOP RGB KIT
FG2256-61RGB	NXD-1700VG RGB KIT, 17" MODERO WALLMOUNT RGB KIT
FG2257-61RGB	NXT-1700VG RGB KIT, 17" MODERO TABLETOP RGB KIT
FG2255-11	NXA-RGBKIT, RGB UPGRADE KIT FOR EXISTING VG PANELS

Wiring and Connection Information

FIG. 9 shows a top view of the finished cable.

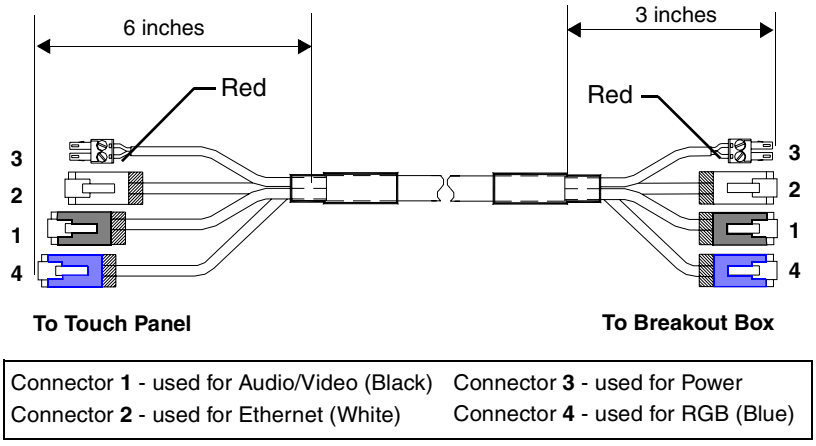

FIG. 9 Finished NXA-MTC/RGB Tabletop Cable - showing standard terminations

The following table provides the wiring information for each of the four (4) available connectors on each side of the NXA-MTC/RGB Tabletop Cable.

Wire Table				
Wire	Connector 1	Connector 2	Connector 3	Connector 4
1	White/Orange	White/Orange	Red	White/Orange
2	Orange/White	Orange/White	Black	Orange/White
3	White/Green	White/Green	-	White/Green
4	Blue/White	Blue/White	-	Blue/White
5	White/Blue	White/Blue	-	White/Blue
6	Green/White	Green/White	-	Green/White
7	White/Brown	White/Brown	-	White/Brown
8	Brown/White	Brown/White	-	Brown/White

Installing CAT5 Suppression Ferrites

Before connecting the RJ-45 cables to the Modero Touch Panel, install the necessary number of CAT5 Suppression Ferrites (FIG. 10) to the RJ-45 Audio/Video cable. These ferrites come as part of the Installation Kits mentioned in the previous Specification table (page 28).
No tools are required for this installation.

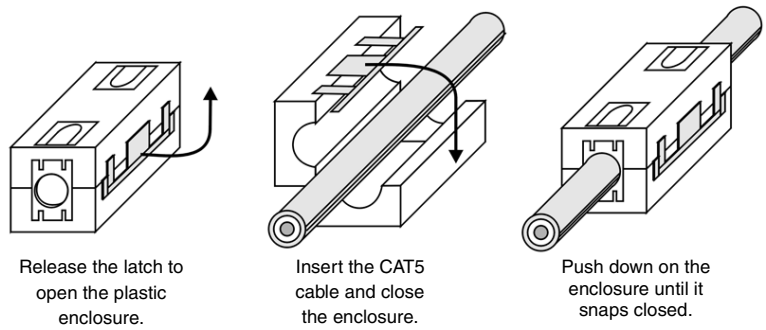

FIG. 10 Installing the CAT5 Suppression Ferrites

NOTE

All 1200V-Series, VG-Series, and Table Top CV10 panels require the installation of an appropriate number of CAT5 Suppression Ferrites when they use an RJ-45 cable to feed an A/V signal from the breakout box.

1. The CAT5 Suppression Ferrite is housed within a plastic enclosure (shown in FIG. 10) with a latch release on one side. Pull to release the latch and open the enclosure.
2. Grasp the Black RJ-45 Audio/Video cable being connected to the panel. This end of the cable is longer than the opposing end which connects to the breakout box (6 inches vs 3 inches). Refer to FIG. 11 for more detailed information.
3. Insert the panel-end of the Black RJ-45 Audio/Video cable into the groove along the inside of the enclosure.

NOTE

The CAT5 Suppression Ferrites MUST be installed onto the cable connected to the Modero's Audio/Video RJ-45 connector (just behind the connector).

4. Snap the enclosure shut with the cable inside, and you're done.

5. Repeat this process again **only** when installing an additional CAT5 Suppression Ferrite (*model specific*).

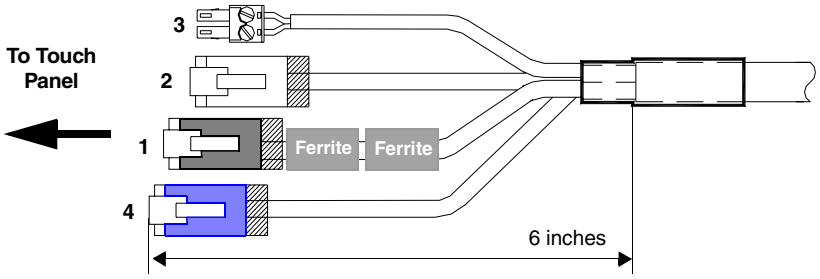

Connector **1** - used for Audio/Video (Black)	Connector **3** - used for Power
Connector **2** - used for Ethernet (White)	Connector **4** - used for RGB (Blue)

FIG. 11 Ferrite connector location on Audio/Video RJ-45 cable

NOTE

It is recommended that any upgrade of internal components be done simultaneously in order to reduce the risk of damage to internal components.
If a user will be upgrading an NXD panel with a wireless card and an NXA-RGB card (NXA-RGBKIT), it is recommended that these both be done at the same time if possible.

NXA-RGB RGB/VGA Interface Card (FG2260)

The NXA-RGB (FIG. 12) is an RGB/VGA plug-in interface card that allows any of AMX's VG-Series Modero Touch Panels to accept either RGB or HDTV Component signals directly from an external source when routed through an optional NXA-AVB/RGB Breakout Box. This card is field upgradeable and works in-tandem with the RGB connector on the front of an NXA-AVB/RGB Breakout Box.

FIG. 12 NXA-RGB RGB/VGA Interface Card (installed within a VG-Series panel)

The NXA-RGB card is an optional accessory (*already installed within Video/RGB panels*) that can be added to any VG-Series Video Modero panel as part of an upgrade kit. The NXA-RGB card is a daughter card that plugs into the Modero's main board. This card provides the ability to display computer graphics (RGB) or component (YCrCb) video within a full screen or resizable on-screen window on the Modero panel. The NXA-RGB card must be used with the NXA-AVB/RGB Breakout Box. This breakout box allows the Modero to accept and display high-bandwidth and high-quality RGB as well as HDTV Component video signals. This box then converts the RGB or component video so that it can be sent across a UTP (unshielded twisted pair) cable to the from the rear RGB/Component DB-15 connector (rear of the box), through the front RGB RJ-45 connector, and then to the panel via the RJ-45 connector on the installed NXA-RGB card.

Product Specifications

NXA-RGB Specifications	
Dimensions (HWD):	• 0.88" x 3.50" x 6.50" (2.22 cm x 8.89 cm x 16.51 cm)
Weight:	• 0.85 lbs (0.39 kg)
Power:	• 240 mA @ 12 VDC
Certifications:	• FCC Part 15 Class B, CE, and EN 60950
Features:	• Accepts RGB or Component inputs (via NXA-AVB/RGB) • Included with 1200VG/1500VG/1700VG RGB Kits • Integrates output of keyboard and mouse data via RGB port • On-screen RGB display window is resizable (all the way up to full screen) • Provides RGB connectivity to the panel over CAT5 cables up to 200 ft. (60.9 m) • Receives VGA and Component video signals from the RGB connector on the front of the NXA-AVB/RGB Breakout Box. • Routes RGB and computer control pass-thru signals from the USB connectors on the Modero panel to the RGB connector on the front of the NXA-AVB/RGB Breakout Box.
Availability:	• This component is available separately or as part of NXA-RGBKIT upgrade kit (**FG2255-11**) for Modero VG-Series touch panels.
Connector:	• RJ-45 connector provides RGB/Component video signals (being routed from the rear RGB/Component input ports) and touch control information to the RJ-45 RGB connector on the NXA-RGB card (installed within the panel).
Included Accessories:	• Five pan-head securing screws • NXA-AVB/RGB Ethernet/RGB Breakout Box QSG (93-2260) • This unit is also available within the **NXA-RGBKit** (**FG2255-11**): - NXA-AVB/RGB Breakout Box (**FG2254-11**) - NXA-MTC/RGB Combo Table Top cable (CA2250-70) - NXA-RGB internal RGB/VGA card (**FG2260**) - NXA-RGBCBL, 15-pin to 5X BNC RGB Breakout cable (**FG2250-80**) - NXT Table Top replacement I/O plate (with RGB connector opening) (62-2250-59) - NXD WallMount replacement adhesive overlay for existing I/O plate (53-2250-03)
Other AMX Equipment:	• Included within the RGB Kit (**FG**xxxx-xx**RGB**) is the following: - Modero VG Touch Panel (NXD/NXT-1200/1500/1700VG) - NXA-AVB/RGB Breakout Box (**FG2254-11**) - NXA-MTC/RGB Combo Table Top cable (CA2250-70) - NXA-PCI80211G (**FG2255-04**) (Table Top Kits ONLY) - NXA-RGB internal RGB/VGA card (**FG2260**) - NXA-RGBCBL, 15-pin to 5X BNC RGB Breakout cable (**FG2250-80**) • NXA-AVB/RGB Breakout Box (**FG2254-11**) • NXA-MTC/RGB Modero cable (CA2250-70) • NXA-RGBCBL, 15-pin to 5X BNC RGB Breakout cable (**FG2250-80**)

Supported Component/VGA Video Resolutions and Formats

NXA-RGB Supported Resolutions and Formats		
Resolutions	Refresh Rates:	Descriptions
VGA Compatible signals:		
560 x 192	60 Hz	• Apple II
560 x 384	60 Hz	• MAC 12”
640 x 350	60 Hz	• EGA HP 12”
640 x 416	60 Hz	• DOS machines
640 x 480	60 Hz, 72 Hz, 75 Hz, 85 Hz	• VGA
720 x 532	60 Hz	• IBM 3472
800 x 600	60 Hz, 72 Hz, 75 Hz, 80 Hz	• SVGA
900 x 720	60 Hz	• Power PC 7 and Power PC 8
1024 x 768	60 Hz, 70 Hz, 75 Hz, 85 Hz	• XGA
1280 x 768	60 Hz, 70 Hz, 75 Hz, 85 Hz	• WXGA
1280 x 800	60 Hz, 70 Hz, 75 Hz, 85 Hz	• WXGA
1152 x 864	60 Hz, 70 Hz, 75 Hz	• XGA
1280 x 1024	60 Hz, 75 Hz, 85 Hz	• SXGA
1600 x 1200	60 Hz	• UXGA
Component/HDTV Compatible signals:		
720 x 483		• HD 480p - SMPTE 293M
1280 x 720		• HD 720p - SMPTE 296M
1920 x 1080		• HD 1080i - SMPTE 27 4M

RGB RJ-45 connection and wiring information

This RJ-45 connector is used to route the signals connected to the RGB / Component input port on the rear of the AVB/RGB Breakout Box to the VG-Series Modero panel. Standard CAT5 cable can be used for this connection with short cable runs under 50 feet (15.24 m). For cable runs over 50 feet (15.24 m), AMX recommends using the Belden Brilliance VideoTwist 7987. This Belden cable is not CAT5 compliant, but is designed to control skew between the red, green, and blue video signals. Therefore, for longer cable runs, the video quality will be much higher using the Belden VideoTwist 7987 cable versus standard CAT5 (or other Ethernet compliant cables). The pinout of this RGB connector is given in the table below.

NOTE

The Belden cable only adjusts for RGB skew but may still need to be configured properly for cable length by using the Cable Variance setting on the RGB Adjustment page (Video Adjustment - RGB Adjustment Page section on page 142*).*

RGB RJ-45 Connector Pinouts and Signals				
Pin	Color	Function	Polarity	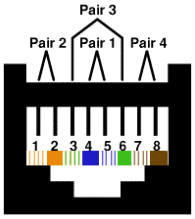 TIA 568B
1	Orange-White	Blue Video	-	
2	Orange	Blue Video	+	
3	Green-White	Data (bidirectional)	-	
4	Blue	Green Video	-	
5	Blue-White	Green Video	+	
6	Green	Data (bidirectional)	+	
7	Brown-White	Red Video	-	
8	Brown	Red Video	+	

NOTE

It is important that the correct pairing is observed.

NXA-CFTP Compact Flash (FG2116-22)

Every Modero panel is shipped with two factory default modules: an EXM Memory Module and a Compact Flash card. **These panels are shipped with a 256 memory module which is not upgradeable.** The default 128 MB Compact Flash card is factory programmed with specific panel firmware and is the only upgradeable memory component. This component can be ordered from AMX in several different upgrade sizes (as listed in the following table):

Optional Compact Flash Memory Upgrades	
Compact Flash:	
NXA-CFTP256M - 256 MB Compact Flash card	(**FG2116-23**)
NXA-CFTP512M - 512 MB Compact Flash card	(**FG2116-24**)
NXA-CFTP1G - 1 GB Compact Flash card	(**FG2116-25**)

Upgrading the internal components involves opening the panel enclosure/outer housing to access the internal circuit board, removing the existing part, and replacing them with the upgrade components, as described in the following sections.

NOTE

It is recommended that any upgrade of internal equipment be done simultaneously in order to reduce the risk of damage to internal components.

t

NXA-PCI80211G Wireless Card (FG2255-04)

The 1200V-Series and VG-Series Modero touch panels can connect to an internal NXA-PCI80211G mini-PCI Wireless Card (FIG. 13) connected to two antennas (57-2250-10).

FIG. 13 NXA-PCI80211G mini-PCI Wireless Card

The NXA-PCI80211G card functions using a 2.4GHz bandwidth with a maximum data transfer rate of 54Mbps. This card is compatible with IEEE 802.11 standards such as: 802.11b and 802.11g.

The NXA-80211G allows the end-user to take advantage of larger bandwidth to utilize features such as: streaming digital video and audio, wireless intercom, Motion JPEG, networked video, and standard wireless Ethernet communication to both a NetLinx controller and networked computers.

Please follow your particular Wireless Access Point's instruction manual for the correct procedures to setup either a secured or unsecured connection.

FCC Statement:

This device complies with Part 15 of the FCC rules. Subject to the following two conditions:
1. **This device must not cause harmful interference and**
2. **This device must accept all interference, including interference that interferes with the operation of this device.**

Modifications not expressly approved by the manufacturer will void the user's authority to operate the equipment.

WARNING: This device has been evaluated and found to be compliant with the FCC Rules for RF Exposure when the device is operated at a minimum separation distance from the user and nearby persons. Operation of this device at closer distances should be avoided.

Certifications: FCCID: CWU-WN2301A, CE, EN 60950, EN 300 328, and RSS 210

FIG. 14 FCC Statement

Product Specifications

NXA-PCI80211G Specifications	
Dimensions (HWD):	• 0.02" x 2.13" x 4.66" (5.0 mm x 54.0 mm x 118.4 mm)
Description:	• Direct Sequence Spread Spectrum (DSSS)/CCK 802.11g Wireless mini-PCI card with detachable antennas.
Weight:	• 1.05 oz (30g)
Antenna Type:	• Dual antenna connector
Bus Interface:	• mini-PCI card, TypeIII B
Certifications:	• FCCID: CWU-WN2301A, CE, EN 60950, EN 300 328, and RSS 210and FCCID (CWU-WN2301A)

NXA-PCI80211G Specifications (Cont.)	
Features:	• Contains integrated power amplifier (PA) and low-noise amplifier (LNA) • Diversity Antenna Connectors automatically select the best available signal • Enhanced transmit and receive chains • Field-installable • Increased sensitivity and multipath tolerance • Operates from 2.300-2.500 GHz • Operate at ISM frequency bands (2.4GHz) with 54Mbps data rate • Pre-configured to communicate with current AMX Wireless Access Points • Support for IEEE 802.11b and 802.11g • Wired Equivalent Privacy (WEP) 64-bit and 128-bit data encryption
Frequency Range:	• Using 802.11b & g communication: - 2.412 ~ 2.462 GHz - North America - 2.412 ~ 2.484 GHz - Japan - 2.412 ~ 2.472 GHz - Europe ETSI - 2.457 ~ 2.462 GHz - Spain - 2.457 ~ 2.472 GHz - France
Media Access Technique:	• CSMA/CA with ACK
Modulation:	• Orthogonal Frequency Division Multiplexing (OFDM) / Complementary Code Keying (CCK)
Network Architecture:	• Ad-hoc mode (Peer-to-Peer) • Infrastructure mode
Network Standard:	• IEEE Compliant • 802.11b and 802.11g
Operating Channels:	• Using 802.11b & g communication: - 11: (Ch 1 - 11) - North America - 14: (Ch 1 - 14) - Japan - 13: (Ch 1 - 13) - Europe ETSI - 2: (Ch 10 - 11) - Spain - 4: (Ch 10 - 13) - France
Operating Environment:	• Temperature: 0°C ~ 55°C (32°F to 131°F) (operating) and -20°C ~ 70°C (-4°F to 158°F) (storage) • Humidity: (non-condensing) 5% ~ 90% RH (operating) and (non-condensing) 5% ~ 95% RH (storage)
Operating Voltage:	• 3.3V ± 5% I/O supply voltage
Power Consumption:	• @ 802.11b communication: - RX: 300 mA - TX: 64 mA - Sleep: 12mA • @ 802.11g communication: - RX: 330 mA - TX: 575 mA - Sleep: 12mA
Radio Data Rate:	• 802.11g compliant: 1, 2, 5.5, 11 (DSSS/CCK); 6, 9, 12, 18, 24, 36, 48, and 54 (OFDM) Mbps data rates
Receiver Sensitivity:	• Using 802.11b communication: 1 Mbps: -86 dBm (max) 2 Mbps: -84 dBm (max) 5.5 Mbps: -83 dBm (max) 11 Mbps: -80 dBm (max) • Using 802.11g communication: 1 Mbps: -86 dBm (max) 2 Mbps: -84 dBm (max) 5.5 Mbps: -83 dBm (max) 11 Mbps: -80 dBm (max)

NXA-PCI80211G Specifications (Cont.)	
Security:	• 64-bit and 128-bit WEP
Availability:	• All 1200V-Series and VG-Series NXT Table Top panels can be field upgraded for wireless communication using the optional NXA-PCI80211G mini-PCI card. • Optional to the following NXD panels: - NXD-1200V - NXD-1200VG - NXD-1500VG - NXD-1700VG

Installation and Upgrade of the Internal NXT Components

Upgrading the components within each of the Table Top panels involves removing the outer housing (with speaker plate), removing and/or installing an existing component, and then placing the outer housing back onto the NXT panel, as described in the following sections.

NOTE

***Do not** use Ethernet cables containing mounting boots. These boots could make removal of the Ethernet connectors (from the panel) difficult and cumbersome.*

Step 1: Remove the existing NXT Outer Housing

1. Carefully detach all connectors from the rear of the touch panel and then gently place the touch panel LCD facedown onto a soft cloth to expose the under-side of the base (FIG. 15). This step helps prevent scratching of the LCD.
2. Tilt the base forward so that both the bottom surface and Housing Screws are easily accessible and then carefully remove the four plastic adhesive feet.

NOTE

Reference the location of the four plastic adhesive "feet". Once the outer housing is placed back onto the panel, these "feet" must be placed back in their original locations so they can fit into their provided openings on a Battery Base.

3. While holding the outer housing and base plate at a 45° (*to prevent it from sliding*), use a grounded Phillips-head screwdriver to remove the eight Housing Screws.

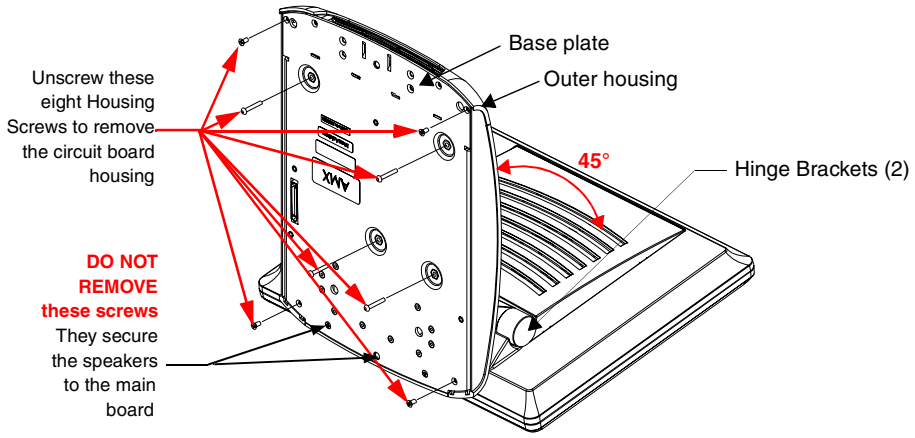

FIG. 15 Location of the attachment screws on an NXT panel

4. Rotate the panel back over (while gripping the entire unit with outer housing) and rest the base back on a flat surface.
5. Gently tilt the LCD backward to a 45° angle.

6. *In a single motion*, carefully pull the outer housing up and then out (away from the LCD panel) to expose the internal circuit board (FIG. 19). ***The NXA-RGB card is available within both the optional RGB Kit and NXA-RGBKIT upgrade.***
7. Unscrew the Stereo Output nut from the Stereo Output jack.
8. Firmly grab the existing connector plate and slide it up and away from the base. This part is later replaced with the RGB connector plate.

Step 2: Install the 802.11g mini-PCI Wireless Card

1. Discharge any static electricity from your body by touching a grounded metal object.
2. Locate the mini-PCI card connector on the main board (FIG. 16 and FIG. 17).

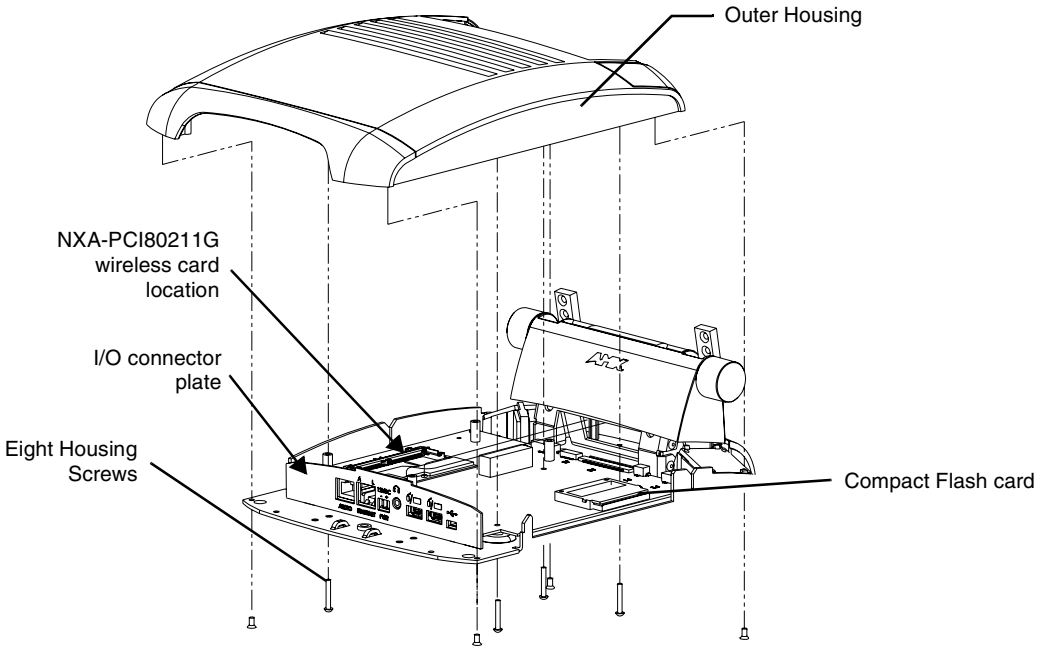

FIG. 16 Location of the NXA-PCI80211G wireless card on the NXT board

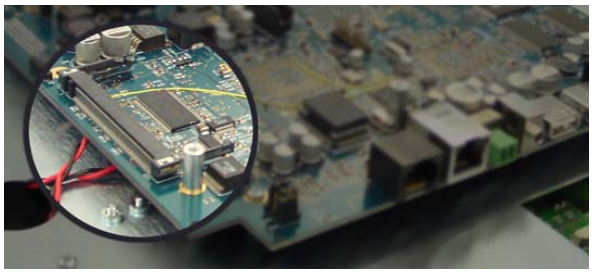

FIG. 17 Location of the mini-PCI card connector on main board

CAUTION

If you have previously installed an NXA-RGB card, it must first be removed prior to gaining access to the mini-PCI connector on the board.

3. Carefully remove the gold-tipped terminal ends of the antenna from their factory default connectors on the main board. *The antenna is secured at this location to restrict its movement prior to connection to a wireless card.*
4. Firmly grasp the NXA-PCI80211G mini-PCI card (from the edges) and insert the pins (at a 25° angle) into the opening on the connector (FIG. 18).

5. While maintaining the 25° angle alignment on the new module, push it in firmly until the contact pins are completely inside the connector and the card "snaps" into place (FIG. 18).
6. Push the card downward (to the main board) until the side braces snap atop the NXA-PCI80211G and hold it in place.

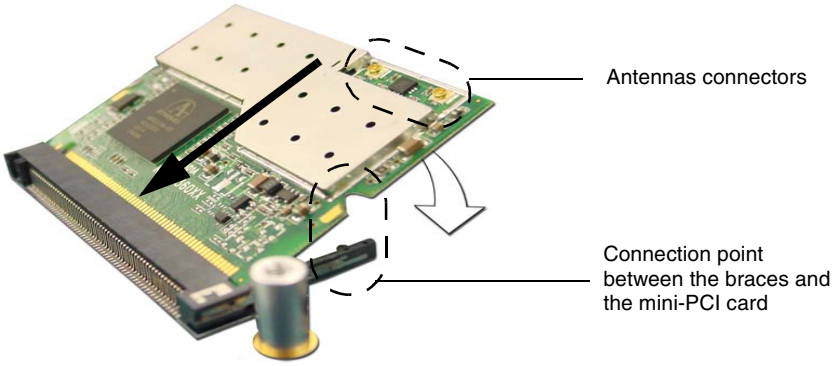

FIG. 18 Installation of the mini-PCI card connector on main board

7. Locate the terminal ends of the antennas and apply downward pressure to "snap" them onto their gold-tipped counterparts on the mini-PCI card (FIG. 18). Carefully push down on each connector to verify it is securely joined to the card.

NOTE

It is recommended that any upgrade of internal equipment be done simultaneously in order to reduce the risk of damage to internal components.
If you are also installing an NXA-RGB card (as part of an NXA-RGBKIT), refer to the installation procedures on page 22 before replacing the outer housing.

Step 3: Install the NXA-RGB Card Component (NXT)

1. Discharge any static electricity from your body by touching a grounded metal object.
2. Locate the RGB card's slot connector on the main board and align it with its counterpart on the bottom of the NXA-RGB card.
3. Carefully, but firmly, insert the NXA-RGB card into the RGB connector slot on the main board until both the card rests atop the four raised securing holes and the RGB RJ-45 connector is evenly aligned with the other RJ-45 connectors on the back of the panel.
4. Use a grounded Phillips-head screwdriver to secure the four NXA-RGB pan-head securing screws to the raised securing holes on the main board.
5. To complete the upgrade process, either upgrade the remaining component (Step 3) or close and re-secure the enclosure using the procedures in *Step 5: Close and Resecure the NXT Panel Enclosure* section on page 41.

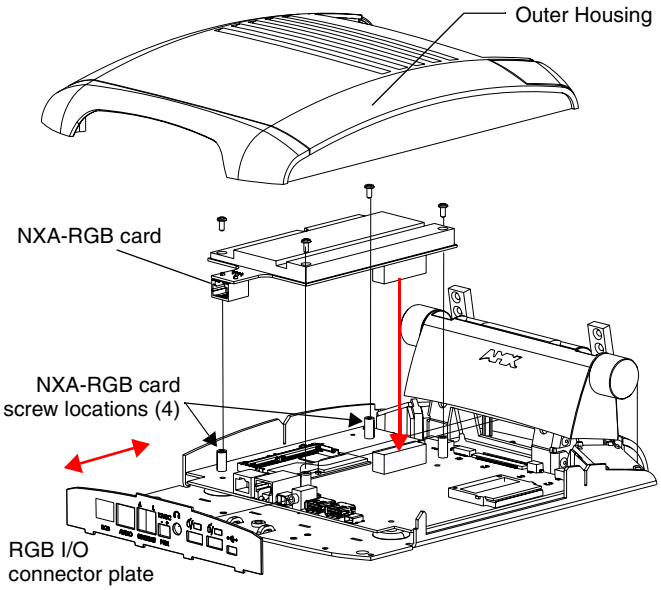

FIG. 19 Location of the NXA-RGB card and I/O plate

Step 4: Install the Compact Flash Memory Card upgrade

1. Discharge any static electricity from your body by touching a grounded metal object and then locate the existing Compact Flash card (*factory-shipped with 128 MB*) on the main board (FIG. 20 for Table Top panels and FIG. 23 for Wall Mount panels).

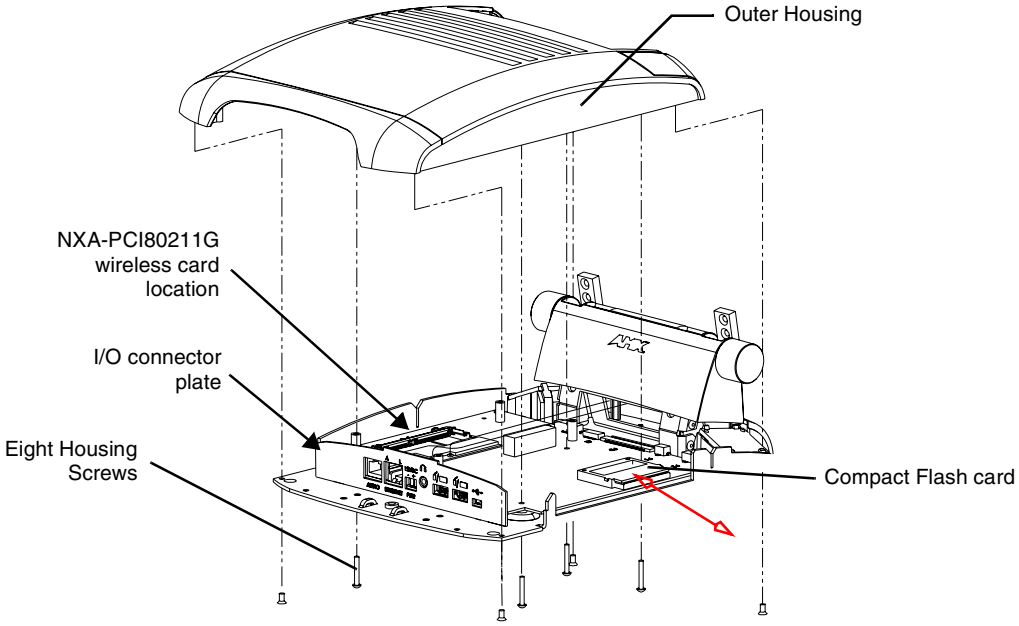

FIG. 20 Location of the Compact Flash card and I/O plate on NXT

2. Insert the tip of a grounded flathead screwdriver into one of the card removal grooves (located on either side of the card), and gently pry the card out of the slot (FIG. 21). Repeat this process on the opposite card removal groove. This alternating action causes the card to "wiggle" away from the on-board connector pins.
3. Grip the old card by its sides and then carefully pull it out of the slot.

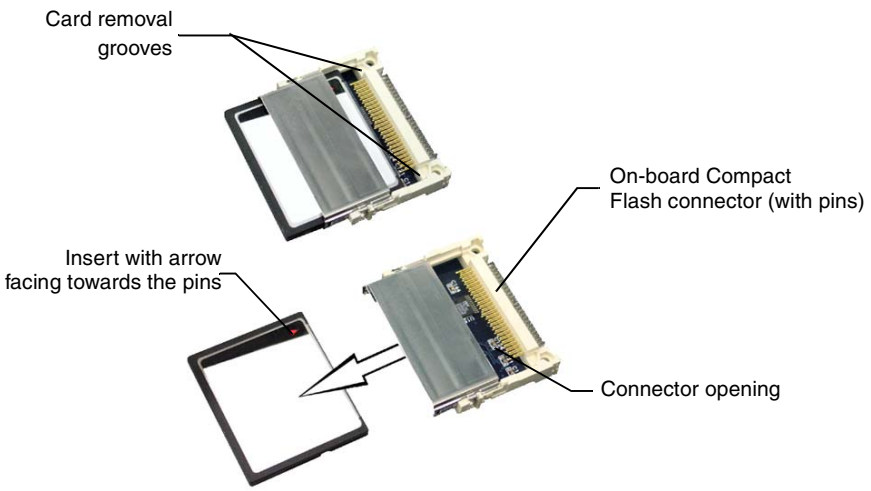

FIG. 21 Removing/installing a Compact Flash Memory card

4. Remove the new CF memory card from it's anti-static bag.
5. Grip the sides of the new CF memory card and firmly insert it into the slot opening (with the arrow facing towards the pins) until the contact pins are completely inside the flash card and it is then securely attached to the pin sockets.
6. To complete the upgrade process, close and resecure the panel enclosure using the procedures in the following step.

NOTE

Any new internal component upgrade is detected by the panel only after power is cycled.

Step 5: Close and Resecure the NXT Panel Enclosure

1. Obtain the new RGB I/O connector plate (similar to the original but containing the added RGB connector opening to the newly installed NXA-RGB) and slide it back into position.
2. Resecure the Stereo Output nut back onto the new Stereo Output jack onto the new RGB I/O plate.
3. With the components securely installed, tilt the LCD back to a 45° and then gently slide-on the outer housing (towards the LCD) until the it is aligned over the installation holes and the tilt bracket prevents any further forward movement (FIG. 19).
4. Gently press down on the housing (toward the base) until it is securely positioned over the circuit board and cover base.

CAUTION

Use caution when re-installing the outer housing. Improper re-installation can cause damage to the internal speakers.

5. While holding the circuit board cover in place, turn the panel back over until the LCD lies facedown on a soft cloth and the under-side of the base is exposed.
6. Insert and secure the eight Housing Screws (using a grounded Phillips-head screwdriver) into their respective locations (FIG. 15).
7. Replace any adhesive plastic "feet" that might have been removed during the removal process of the outer housing. *These "feet" must be placed back onto their original locations so they can fit into their provided openings on the Battery Base.*

8. Grasp both the LCD and housing and then rotate the entire unit back onto a flat surface.
9. Insert all connectors and apply power.

Installation and Upgrade of the Internal NXD Components

Upgrading the components within a WallMount panel involves removing the rear plastic outer housing (back box), removing and/or installing an existing component, and then placing the back box back onto the NXD panel, as described in the following sections.

Step 1: Remove the existing NXD Outer Housing

1. Carefully detach all connectors from the side of the touch panel and remove the front magnetic faceplate from the NXD unit by firmly gripping the faceplate and pulling outwards, while applying a small amount of pressure to remove it from the main unit.
2. Place the LCD facedown onto a soft cloth to expose the under-side of the unit. This step helps prevent scratching of the LCD.
3. Unscrew the Stereo Output nut from the Stereo Output jack.
4. Remove the I/O connector plate by using a grounded Phillips-head screwdriver to remove the two screws and slide the I/O connector plate away from the back box housing.

CAUTION

DO NOT REMOVE THE PANEL SECURING SCREWS. These screws secure the LCD to the metallic casing.

5. Unscrew the four pan-head Housing Screws from the rear of the NXD unit (FIG. 22) and gently remove the outer housing. These four screws secure the back box to the internal panel casing.

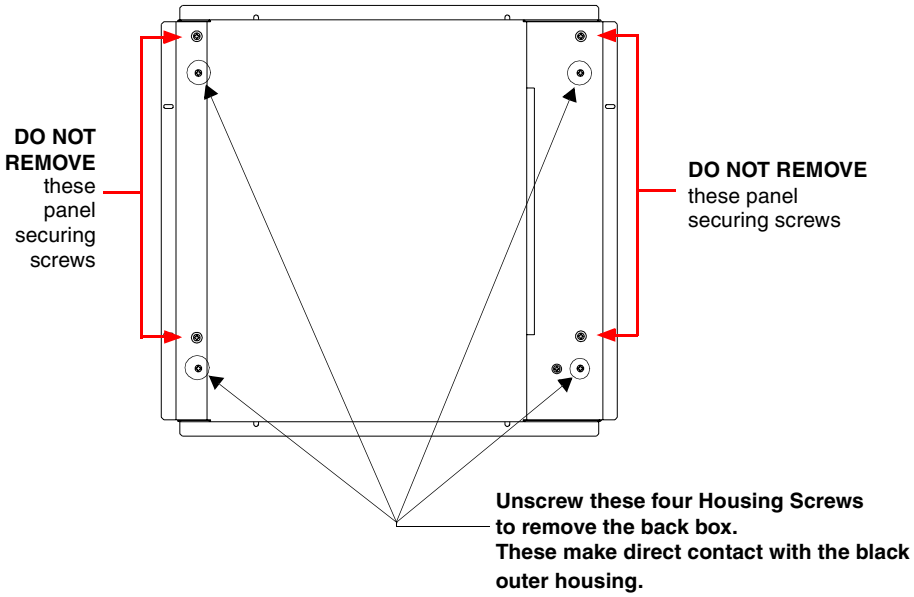

FIG. 22 Location of the securing screws on an NXD panel

Step 2: Install the new 802.11g mini-PCI Wireless card (NXD)

Complete the procedures outlined within *Step 2: Install the 802.11g mini-PCI Wireless Card* section on page 38 and then continue with the following step.

Step 3: Install the new RGB Card Component (NXD)

1. Discharge any static electricity from your body by touching a grounded metal object.
2. Locate the RGB card's slot connector on the main board and align it with its counterpart on the bottom of the NXA-RGB card.
3. Carefully, but firmly, insert the NXA-RGB card into the RGB connector slot on the main board until both the card rests atop the four raised securing holes and the RGB RJ-45 connector is evenly aligned with the other RJ-45 connectors on the back of the panel.
4. Use a grounded Phillips-head screwdriver to secure the four NXA-RGB pan-head securing screws to the raised securing holes on the main board. Refer to the *Step 3: Install the NXA-RGB Card Component (NXT)* section on page 39 for more information.

Step 4: Install the new Compact Flash Memory card (NXD)

1. Complete the procedures outline within *Step 4: Install the Compact Flash Memory Card upgrade* section on page 40 and then continue with the following step.

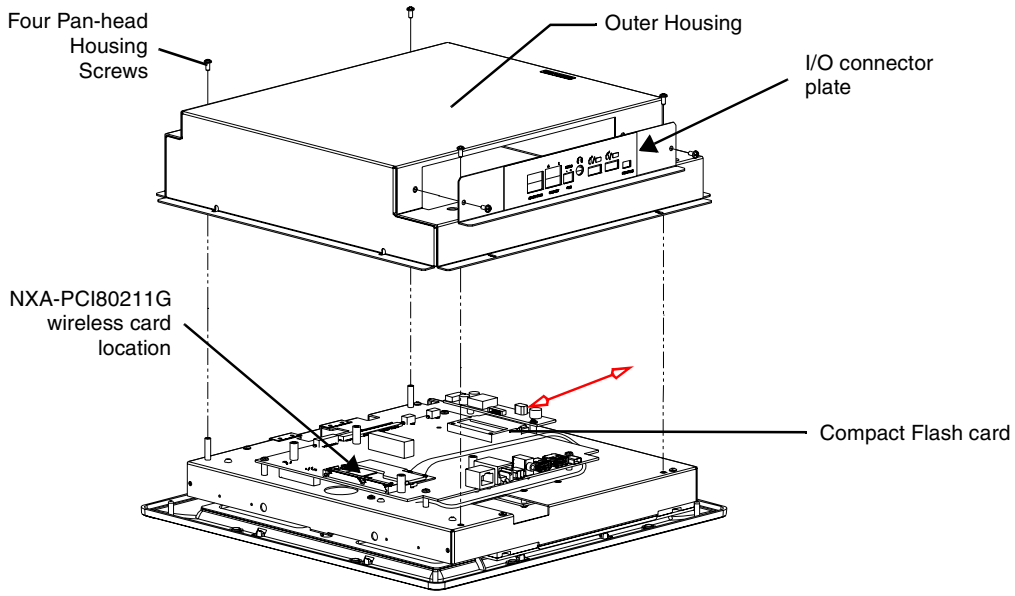

FIG. 23 Location of the Compact Flash card and I/O plate on NXD

Step 5: Close and Resecure the NXD Panel Enclosure

1. With the components securely installed, gently place the outer housing back onto the metallic panel casing (with the connector opening on the right-side of the panel) and align the four pan-head Housing Screw holes along the edges of the outer housing.

CAUTION

Use care not to bend or damage any antenna connections while replacing the outer housing.

2. Insert and secure the four pan-head Housing Screws into the pre-drilled holes along the edges of the NXD unit by using a grounded Phillips-head screwdriver.

3. Remove the previous I/O plate adhesive overlay (*this reveals a pre-drilled RGB connector opening*) and replace it with the new adhesive RGB overlay (53-2250-03).
4. Reinstall the upgraded RGB I/O connector plate by aligning all connectors to their respective locations (FIG. 24).

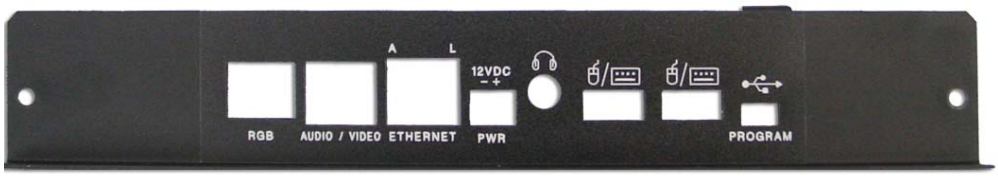

FIG. 24 NXD I/O plate with upgraded RGB overlay

5. Secure the I/O plate using a grounded Phillips-head screwdriver and then twist the Stereo Output nut back onto the Stereo Output jack.

NXT-BP Power Pack (FG2255-10)

The NXT-BP Power Pack (FIG. 25) is a rechargeable Lithium-Ion "smart" battery used to provide power to the NXT Modero panel through the NXA-BASE/B Battery Base. This battery incorporates an on-board battery life indicator. The NXT-BP battery can be charged through either the base (when connected to the Modero panel) or through an optional NXT-CHG Modero Power Station. Extra NXT-BP Power Packs can be purchased separately as an optional accessory.

FIG. 25 NXT-BP Power Pack

Product Specifications

NXT-BP Specifications	
Dimensions (HWD):	• 0.69" x 3.50" x 5.81" (1.75 cm x 8.89 cm x 14.76 cm)
Power (Voltage):	• 11.1 Volts (nominal)
Weight:	• Single NXT-BP Power Pack: 1.0 lbs (0.45 kg)
Features:	• Battery Usage: 3 to 8 hours (*time is panel-type and usage dependant*) • Charge Capacity: 6300mAh
Operating / Storage Environment:	• Operating Temperature: 0° C (32° F) to 40° C (104° F) • Operating Humidity: 20% - 85% RH • Storage/Discharge Temperature: -20° C (-4° F) to 60° C (140° F) • Storage Humidity: 5% - 85% RH

NXA-BASE/B Battery Base Kit (FG2255K)

The NXA-BASE/B Battery Base is a Modero accessory that allows the Modero Table Top touch panels (NXT) to function off the collective charge of two internally connected NXT-BP batteries (**FG2255-10**). The base provides both power and battery information to the panel via the panel interface connector (FIG. 26). The NXT-BP batteries can be charged through either the base (only when connected to the NXT touch panel) or through an optional NXT-CHG Modero Power Station.

FIG. 26 NXA-BASE/B and NXT-BP combo

This base also comes as part of a NXA-BASE/B Kit that contains one (1) battery base and two batteries. The accompanying batteries can be charged through either the base or optional NXT-CHG Battery Charger (**FG2250-50**). Refer to the *Installing the NXA-BASE/B to an NXT Modero Panel* section on page 46 for more detailed installation and usage instructions.

Product Specifications

NXA-BASE/B Specifications	
Dimensions (HWD):	• 1.13" x 8.63" x 11.81" (2.86 cm x 21.91 cm x 30.00 cm)
Power Requirements:	• 2.7 A @ 12 VDC (max power draw while charging)
Weight:	• Base unit: 1.25 lbs (0.567 kg) • Base and 2 batteries: 3.23 lbs (1.47 kg)
Features:	• Charge time for two depleted batteries ~ 5 - 8 hours (***when NXT panel is in Sleep mode***) • Must be connected to the Modero unit utilizing a 12 VDC-compliant power supply
Operating / Storage Environment:	• Operating Temperature: 0° C (32° F) to 40° C (104° F) • Operating Humidity: 20% - 85% RH • Storage Temperature: -20° C (-4° F) to 60° C (140° F) • Storage Humidity: 5% - 85% RH
Other AMX Equipment:	• NXT-CHG Kit (**FG2250-50K**): 1 charger (**FG2250-50**) and 2 NXT-BP batteries (**FG2255-10**) • NXT-BP battery pack (**FG2255-10**) • NXT-CHG battery charger (**FG2250-50**)

NOTE

It is recommended to fully charge the batteries before their initial use.

Checking the NXT-BP battery charge

1. Press the Battery Life Indicator button (FIG. 27) once to illuminate the Battery Life LEDs and display the percent charge remaining on the battery (this indication lasts a few seconds).

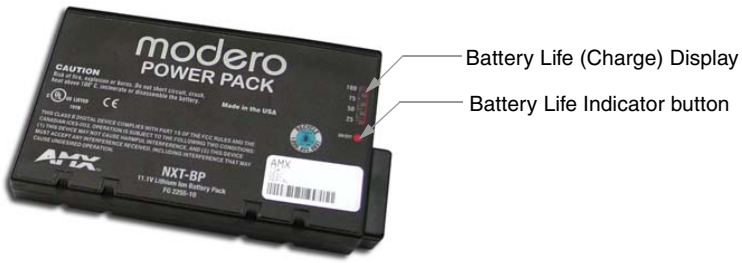

FIG. 27 NXT-BP (showing Battery Life Indicator button and charge)

2. Repeat the above step for each NXT-BP battery.
3. Charge the NXT-BP battery by either inserting it into the battery base or from within the optional NXT-CHG charger (which can sequentially charge up to two batteries).

NOTE

If the 25% LED is blinking, this indicates there is less than 5% of a charge remaining on the battery.

Installing the NXA-BASE/B to an NXT Modero Panel

The battery base must be installed onto the NXT panel without any NXT-BP batteries.

1. Power Off the panel before attempting to use the NXA-BASE/B.
2. Place the empty battery base onto a flat/level surface.
3. Verify the alignment of the Panel Interface connectors between the panel (male connector) and base (female connector) (FIG. 28).

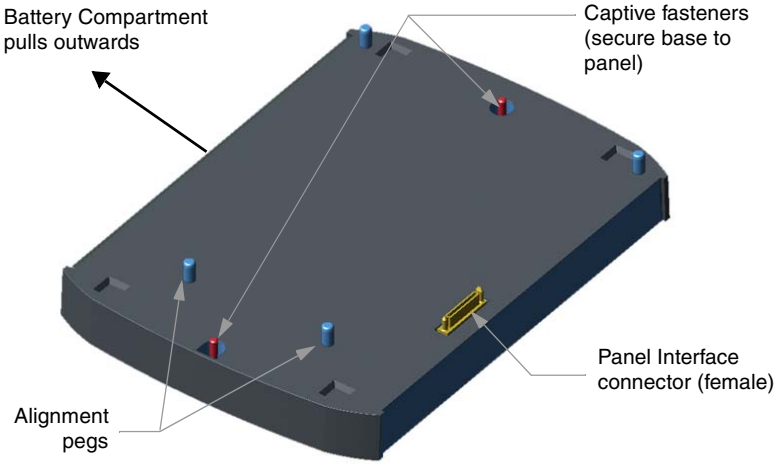

FIG. 28 NXA-BASE/B showing Panel Interface and connector locations

4. Carefully place the Modero panel over the base alignment pegs (FIG. 28 and FIG. 29).

CAUTION

The battery base cannot be "hot-swapped". A panel receiving power through a connected 12 VDC-compliant power supply cannot have a battery base installed onto the bottom of the panel while powered. POWER OFF the panel before installing the NXA-BASE/B.
"Hot swapping" could damage the base and cause it not to be recognized by the panel.

5. Gently apply downward pressure until the panel is securely mounted to the battery base (FIG. 29).

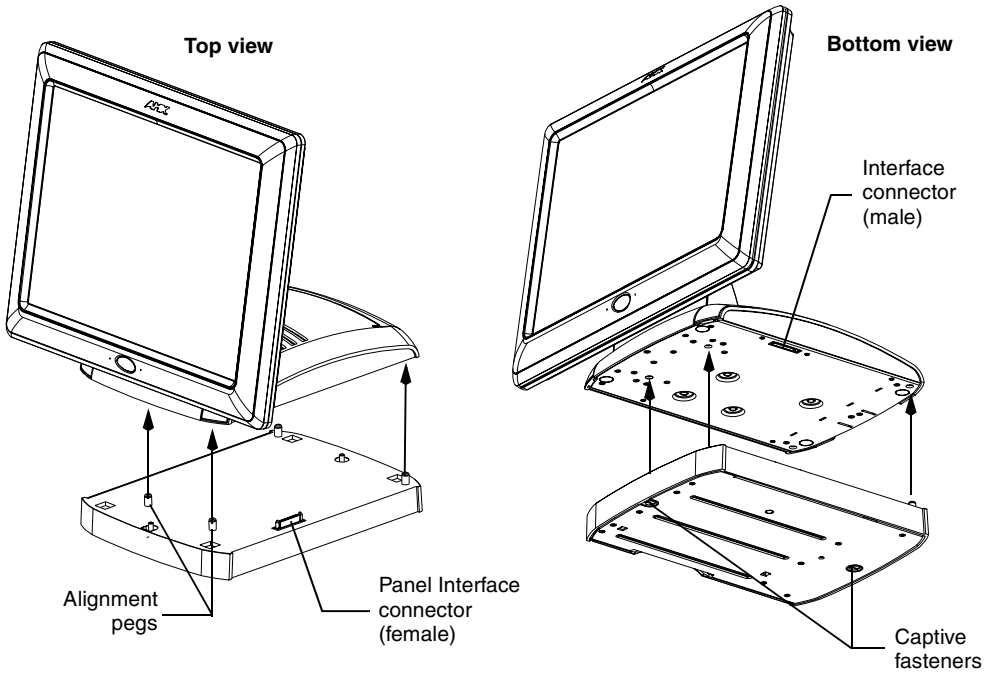

FIG. 29 NXA-BASE/B shown aligning with NXT panel

6. Firmly grip both the panel (from the side) and battery base (from below) together.
7. Gently place the touch panel LCD facedown onto a soft cloth (this prevents scratching of the LCD while the battery base is being secured).
8. Locate the captive fasteners on the underside of the battery base by angling the base combo slightly forwards.
9. Secure each captive fastener head using a grounded flat-head screwdriver until the NXA-BASE/B is securely attached to the underside of the NXT Modero touch panel.
10. Firmly grip the panel LCD/base combo and gently rotate the unit back onto the base.

Installing an NXT-BP into the NXA-BASE/B

The battery base does not directly connect to a power supply, but rather receives its power directly from the Modero panel, through the Panel Interface connector.

NOTE

Remove any connectors from the rear of the Modero NXT panel before continuing with the installation of the batteries. Power can only be supplied after the batteries have been installed.

1. With the panel mounted on the battery base, open the battery compartment (FIG. 30) by pulling the handle outwards. This compartment houses two NXT-BP batteries.
2. Install the NXT-BP battery. label-side down.

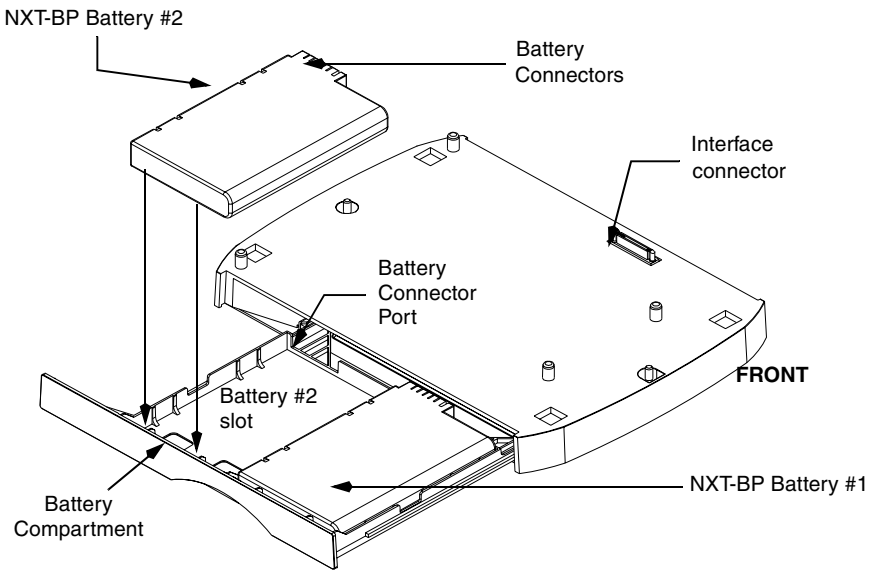

FIG. 30 Battery installation procedure

3. Align the battery connectors with the corresponding battery connector port (located inside the battery compartment), as shown in FIG. 30.
4. Insert the NXT-BP battery until the connectors securely fit into the battery connector port.
5. Repeat steps 2 through 4 for the other battery.
6. Apply a small amount of pressure to close the battery compartment until the compartment latches.
   - After a few seconds, the panel will turn On and the AMX logo will appear (indicating the panel is receiving power.

Charging the NXT-BP batteries with the NXA-BASE/B

1. Follow the procedures from the previous sub-section to attach the NXT touch panel to the NXA-BASE/B.
2. Insert each battery into the battery compartment shown in FIG. 30.
3. Insert a 2-pin connector from a power supply to the rear PWR connector on the NXT Modero panel.
   - The charge status bargraph indicators, on the Battery Base page, indicate when the batteries are fully charged.

NOTE

The NXA-BASE/B will only charge batteries when the NXT panel is in Sleep mode.

NXT-CHG Battery Charger Kit (FG2255-50K)

The NXT-CHG Kit includes one charger and two batteries. The optional NXT-CHG Modero Power Station (FIG. 31) is a two-slot, stand-alone battery charger that can be used to recharge up to two NXT-BP batteries. The batteries are charged in the order they are inserted into the charger. The NXT-CHG Slot 1 has the feature of being able to completely discharge and recharge (*recalibrate*) a battery.

FIG. 31 NXT-CHG Kit (consists of one NXT-CHG charger and two NXT-BP batteries)

Product Specifications

NXT-BP and NXT-CHG Specifications	
Dimensions (HWD):	• 1.13" x 8.63" x 11.81" (2.86 cm x 21.91 cm x 30.00 cm)
Power Requirements:	• NXT-BP Battery Voltage - 11.1 Volts • NXT-CHG: 90 - 264 VAC, 47-63 Hz, Single Phase (using the included 24 VDC power supply)
Weight:	• 0.57 lbs (0.26 kg)
Features:	• Charge time for two depleted batteries: ~ 5 hours • Charge Rate: 2.5 A @ 12 VDC • 2-Bays: Sequential charging • LED: One LED indicator in front of each bay which conveys the status of that bay. Refer to the *Reading NXT-CHG LED Indicator* section for more information. • Recalibration pushbutton (located between the bays): Initiates recalibration sequence in the **left bay only**. • Recalibration Time: less than 9 hours
Other AMX Equipment:	• NXT-BP battery pack (**FG2255-10**) (additional)

The batteries are charged in the order they are inserted into the NXT-CHG. SLOT 1 of the NXT-CHG has the ability to completely discharge and recharge (*recalibrate*) a battery.

NOTE

Recalibration improves the reporting accuracy of the battery charge back to the Modero panel.

Powering the NXT-CHG

The NXT-CHG Smart Battery Charger uses an included power supply to charge inserted batteries.

1. Connect the rear of the NXT-CHG to the power adapter.
2. Connect the power adapter to the provided power cord (*with plug*).
3. Provide power to the unit by connecting the power cord (*with plug*) into a power outlet that meets the requirements outlined in the *Specifications* section for the NXT-CHG.

Reading NXT-CHG LED Indicator

FIG. 32 shows the components on the NXT-CHG Smart Battery Charger.

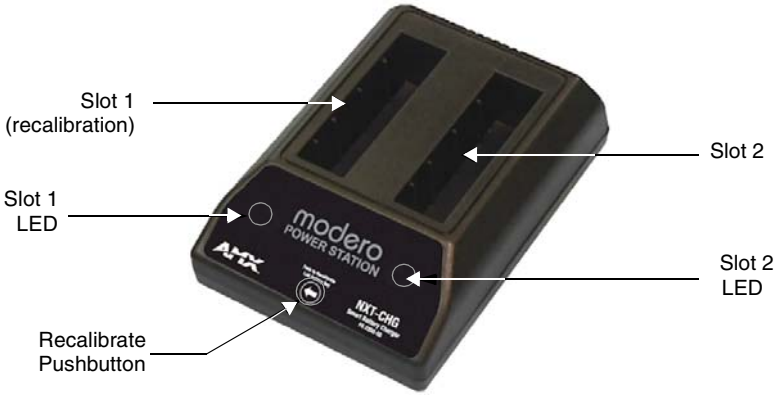

FIG. 32 Component locations on the NXT-CHG

There is one LED indicator on the front of each battery slot that indicates the status of that slot. The blink patterns for these LEDs are described in the following table:

- **Off**: No battery detected.
- **Green Flashing**: Fast charging.
- **Green Solid**: Fully charged.
- **Yellow Flashing**: Recalibration in process.
- **Yellow/Green**: Recalibration complete.
- **Yellow Solid**: Standby (waiting for other battery to charge).
- **Red Flash**: Error (problem with either the battery connection to the internal slot, or with the battery itself).

Charging the NXT-BP batteries using the NXT-CHG

1. Review the *Checking the NXT-BP battery charge* section on page 46 to confirm the percentage of charge remaining on the batteries.
2. Provide power to the charger (as outlined in the *Powering the NXT-CHG* section on page 50).
3. Align the battery connector with the corresponding charge slot within each of the two NXT-CHG slots.
4. Firmly insert the battery into the desired slot until the battery is both securely located within the slot and there is activity from the corresponding Slot LED. Refer to the *Reading NXT-CHG LED Indicator* section on page 50 section for LED information.

Recalibrating the batteries

The recalibration process increases the accuracy of the battery charge level. Recalibration of the batteries is only done upon request from the Modero on-screen Battery Base page. Refer to the *Battery Base Page* section on page 151 for more detailed Battery Base page information.

NOTE

Recalibration can only be done with Slot 1 on the NXT-CHG.

1. Place the selected battery securely into Slot 1 (left slot) until there is activity on the Slot 1 LED.
2. Push the **Recalibration** pushbutton (located between the two slots) to initiate recalibration in the left bay only.

Installation Procedures: 12" and 15" Panels

Overview

NXT panels are mounted onto flat (horizontal) surfaces in either a stand-alone or combo (NXT atop an NXA-BASE/B battery base) configuration. NXD panels are installed into either a pre-wall surface (using a CB-TP12/CB-TP15 conduit/wallbox) or a solid surface (using either solid surface or drywall screws).

NOTE

It is recommended that if you are planning on upgrading your panel components (flash, wireless, RGB card), you do so before beginning any panel installations.

Unpacking the Panel

1. Inspect and confirm the contents of the shipment box to verify that you have all specified parts. Refer to the *Specifications* sections on page 2 and page 7 for more information about included accessories and other AMX equipment.
2. Carefully remove the panel from the shipping box.
3. Carefully peel the protective plastic cover from the LCD.

NOTE

If the protective plastic LCD cover is not removed, the panel may not respond properly to touch points on the LCD or allow proper screen calibration.

Installing Internal Components

Installation of the internal components such as the NXA-PCI80211G Wireless card and NXA-RGB Interface card are described in detail within the following sections:

- *Step 2: Install the 802.11g mini-PCI Wireless Card* section on page 38.
- *Step 3: Install the NXA-RGB Card Component (NXT)* section on page 39.

Upgrading to the MB-TP12/MB-TP15 VESA Mounting Kit

Upgrading the existing back box with the new VESA Mounting Kit on both the 12" (**FG031-50**) and 15" panel (**FG032-50**) is identical and requires 3 main processes:

- Removing the pre-existing back box and installing the new VESA back box.
- Threading cables through the strain relief grommet opening in the rear plastic cover.
- Finalizing the installation of the NXD (with VESA back box and cables) into the plastic cover, securing both components, and finalizing the strain relief grommet installation.

NOTE

The installation procedures found in this section are identical for both sizes of panels (12" and 15"). Only overall dimensions and FG product numbers are different.
The new MB-TP Universal VESA Mounting Box uses a standard VESA installation pattern of 75 mm between holes. VESA mounts that conform to this pattern can be used on the MB-TP Housing.

Removing the Original Modero Back Box

1. Detach all connectors from the side of the touch panel.
2. Remove the magnetic faceplate from the NXD unit by gripping the faceplate and pulling outwards while applying a small amount of pressure to remove it from the main unit.
3. Place the LCD face-down on a soft cloth to expose the back of the panel and prevent scratching of the LCD.
4. Unscrew the Stereo Output nut from the Stereo Output jack.
5. Remove the I/O connector plate by using a grounded Phillips-head screwdriver to remove the two screws and slide the I/O connector plate away from the back box housing.
6. Remove the four pan-head Housing Screws from the rear of the NXD unit (FIG. 33). These screws secure the back box to the internal panel casing.

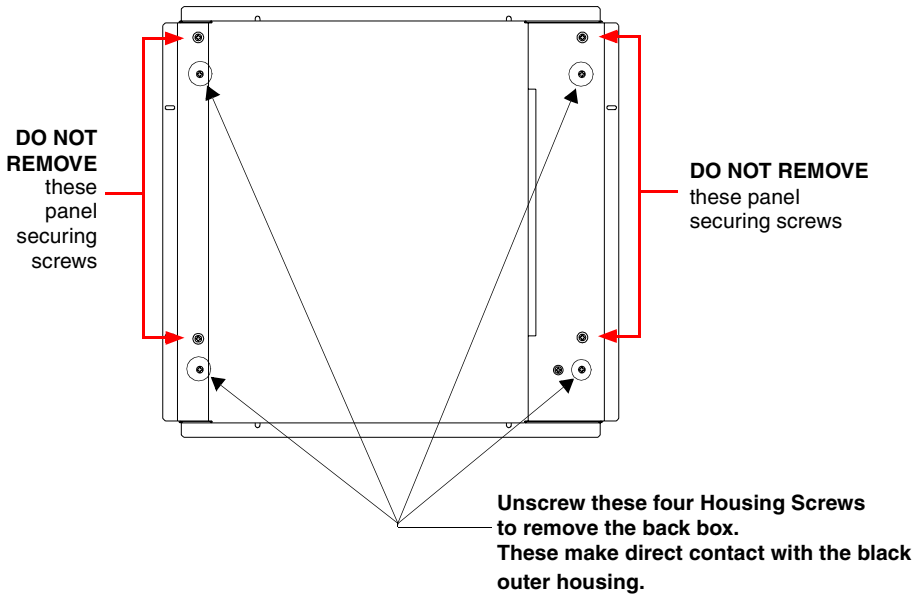

FIG. 33 Location of the attachment screws on the NXD back box

WARNING

***DO NOT REMOVE THE FOUR PANEL SECURING SCREWS**. These screws secure the LCD to the metallic casing underneath.*

7. Lift the back box housing to separate it from the internal panel casing.

Installing the MP-TP12/15 Back Box

1. Unscrew the four pan-head Housing screws (#8-32) from the MP-TP12/15 rear plastic cover.
2. Gently place the MP-TP12/15 back box over the internal panel casing (with the cable routing hole on the right-side of the panel).
3. Re-install and secure the four pan-head Housing Screws into their pre-drilled holes along the edges of the MB-TP12/15 back box (FIG. 34) and secure them using a grounded Phillips-head screwdriver.
4. Place the I/O connector plate back over the connector opening and align the connector locations.
5. Resecure the I/O connector plate (using a grounded Phillips-head screwdriver) and resecure the Stereo Output nut on the Stereo Output jack.

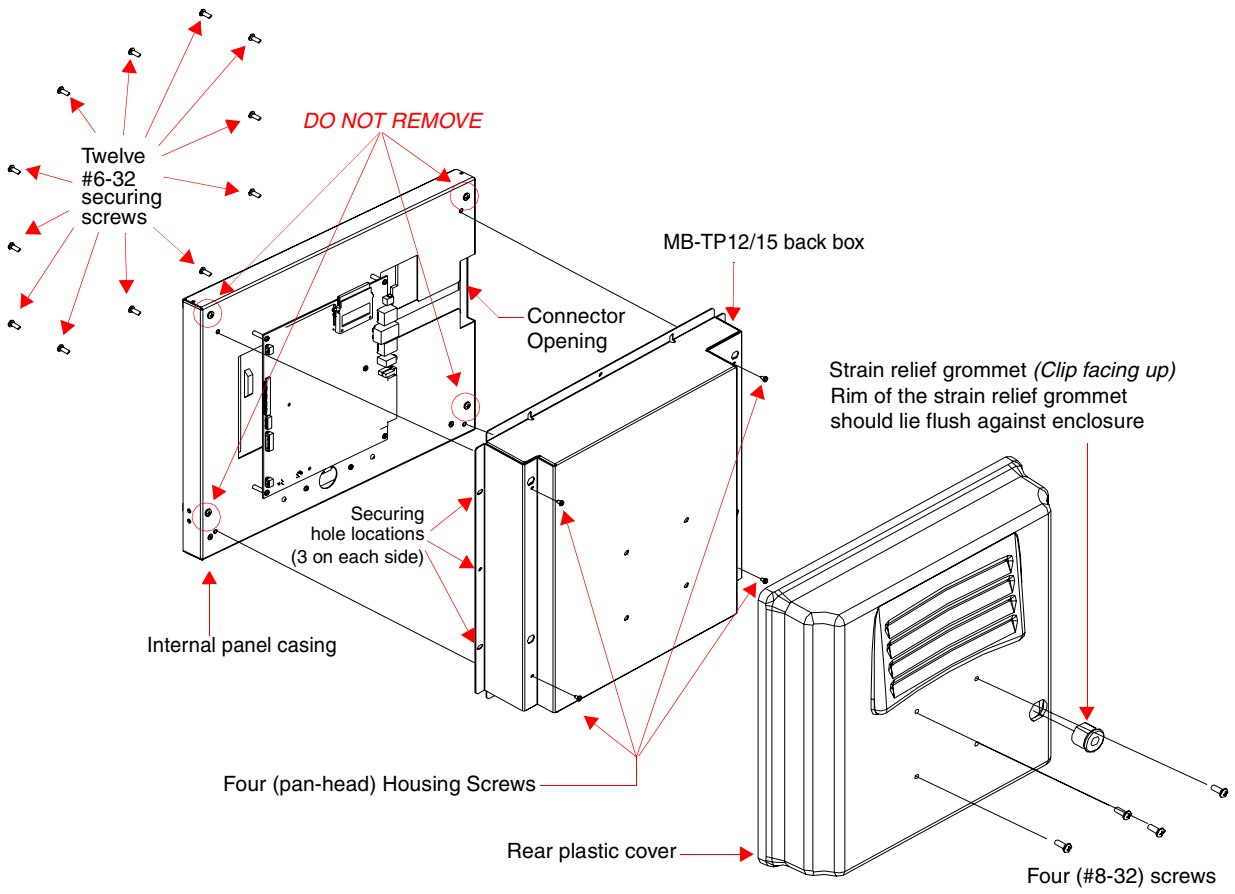

FIG. 34 Location of the attachment screws on the NXD back box and VESA housing

Cable Installation for the MP-TP12/15 Back Box

1. Connect the cable connectors (RJ-45, Ethernet, and any other audio/video wiring) to their respective locations along the side of the touch panel.
2. Use the tie-wrap (45-0009A) to wrap the cables together inside the VESA Mount enclosure. This cable tie is used to insure the cable will not pull through or work itself through the new larger strain relief grommet (45-0032-01) over time.
3. Thread the incoming cables through the hole on the rear plastic cover and then through the strain relief grommet.
4. Slide the grommet along the cable and securely insert it into the opening on the rear plastic cover (FIG. 34).

Finalizing the installation

1. Gently place the rear plastic cover over the NXD panel (with LCD and MB-TP12/15 back box).
2. Insert the protruding cables, coming out from the opening on the rear plastic cover, into the open strain relief grommet.
3. Allow some slack/length on these cables as a service loop. This service loop provides enough cable length so you can later remove the NXD (with connected cables) from the rear plastic cover.

WARNING

VERIFY THE LENGTH AND LOCATION OF THE INSERTED CABLES. ONCE THE STRAIN RELIEF GROMMET IS CLOSED, IT IS DIFFICULT TO RE-OPEN.

4. Carefully apply pressure to close the strain relief grommet over the desired cable location.

CAUTION

Verify the Strain Relief Grommet is securely closed over the cables and the clip is facing the correct direction (upwards). The process of securing the strain relief grommet may require the use of pliers. Also verify the length and location of the inserted cables. Once the strain relief grommet is closed, it is difficult to re-open.

5. Firmly push the Strain Relief Grommet into the opening (toward the inside) until the rim is securely flush against the back of the rear plastic cover (FIG. 34).
6. Securely grasp both sides of the NXD panel (with LCD, MB-TP12/15 back box, and attached cables), rotate the entire unit over, and lie it on a flat level surface.
7. Note the available mounting contact surface area on the rear plastic cover of the MB-TP12 (FIG. 35) and MB-TP15 (FIG. 36). This area represents the space available for use with a VESA connector plate.

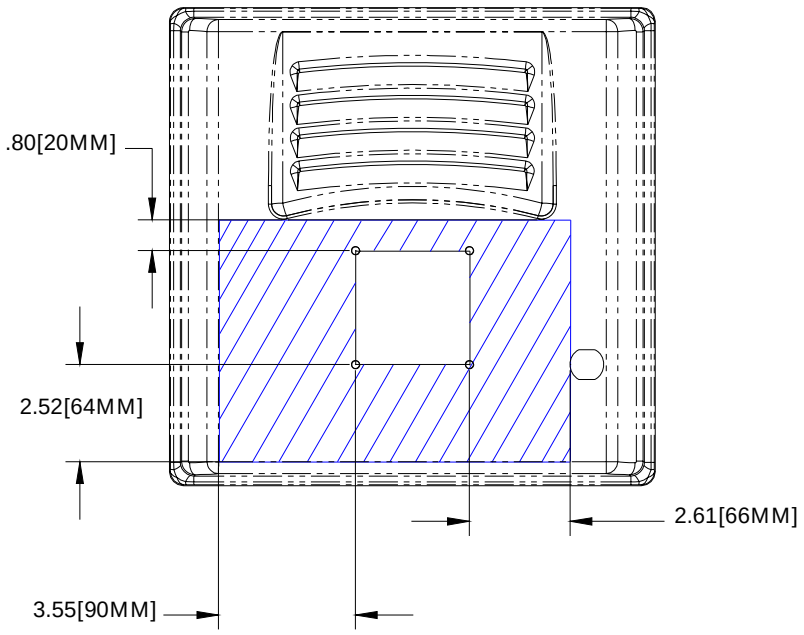

FIG. 35 MB-TP12 Mounting contact surface area

8. Insert and secure the twelve #6-32 securing screws into their pre-drilled holes along the edges of the NXD unit (FIG. 34). This step secures the NXD unit to the rim of the rear plastic cover.
9. Align a VESA mount connector (purchased separately) to the four #8-32 screw holes on the back of the rear plastic cover (FIG. 34).
10. Insert the four provided #8-32 screws through the VESA mount's four holes and then into the pre-drilled holes on the rear plastic cover.

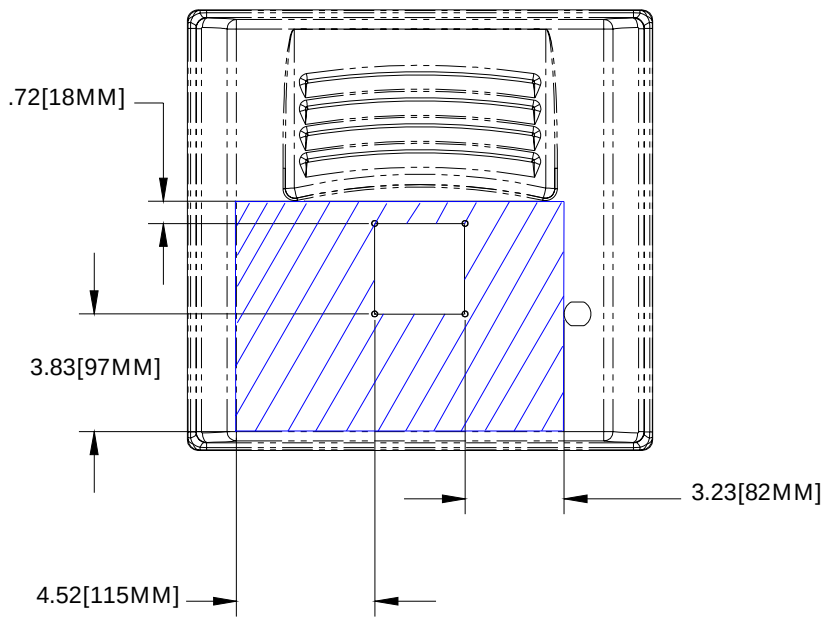

FIG. 36 MB-TP15 Mounting contact surface area

CAUTION

When installing a VESA mount to the rear plastic cover, use only the AMX provided #8-32 screws.

11. Secure these four #8-32 screws to the rear plastic cover by using a grounded Phillips-head screwdriver. This step secures the VESA mount to the rear of the panel.

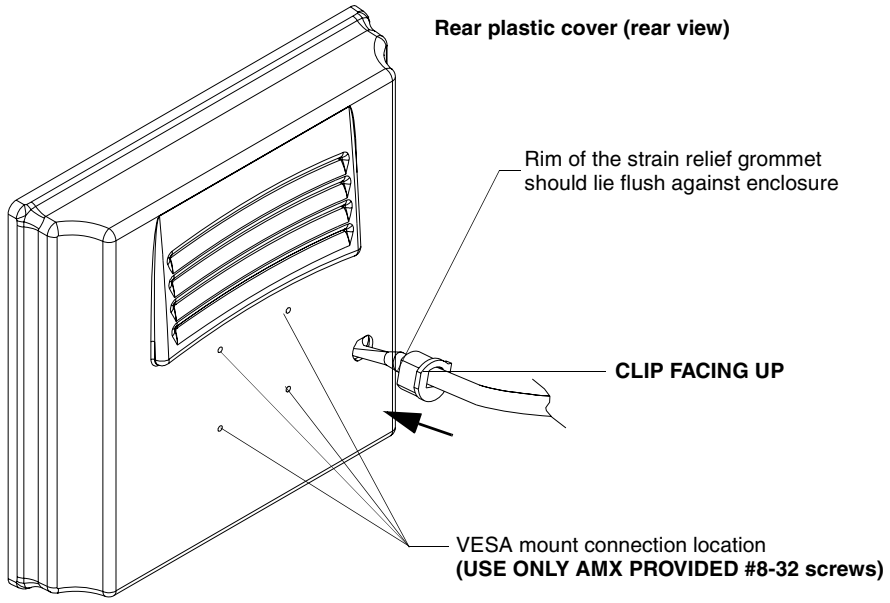

FIG. 37 Installation of grommet into the rear plastic enclosure

Refer to your particular VESA mount manufacturer's installation procedures for further surface mounting procedures.

Pre-wall Installation of the Conduit Boxes

Wall Mount panels (NXDs) are contained within a metallic outer housing (back box). This back box is **not removed** when installing the NXD into a conduit box (CB-TP15 or CB-TP12). The back box is ***only*** removed to either gain access for the replacement of the Memory/Compact Flash or upgrade the unit with an MB-TP Universal VESA Mounting Kit.

WARNING

INSTALLER: LEAVE A GAP BETWEEN THE STUD AND CONDUIT BOX TO ACCOMMODATE THE DRYWALL SHEETROCK. *This gap allows the installation of the drywall/sheetrock after the conduit box has been installed.*

The most important thing to remember when mounting this conduit box is that the mounting tabs must be mounted flush against the outside of the sheetrock.

The CB-TP12 and CB-TP15 conduit wallboxes are optional metallic boxes that are secured onto stud beams prior to the installation of a solid surface. Installation procedures and configurations can vary. This section describes the installation procedures for the most common installation scenario.

1. Fasten the CB-TP15 or CB-TP12 to a stud through the stud fastening holes, located on the inside of the conduit box (FIG. 38), by using either nails or screws.

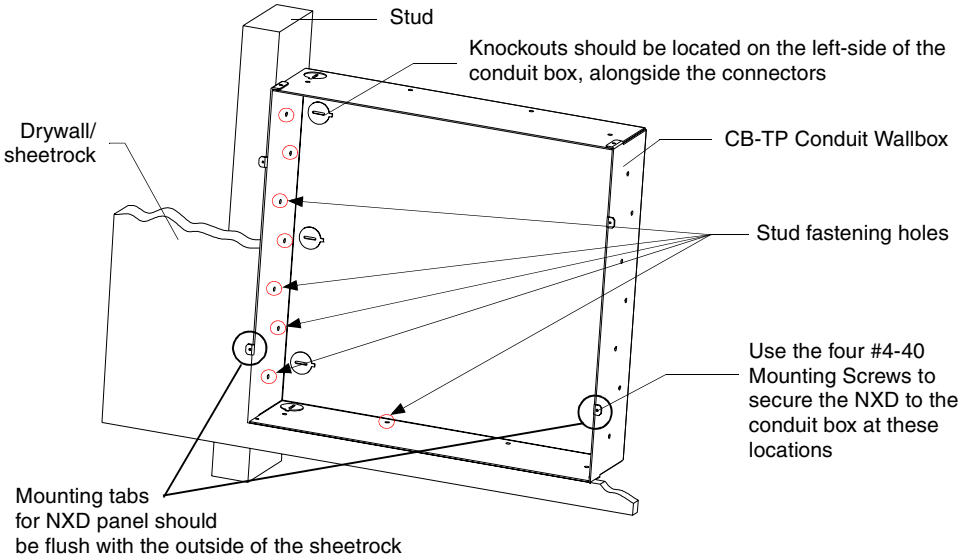

FIG. 38 Screw locations for conduit box attachment in a pre-wall installation

2. Remove any necessary wiring knockouts from the (optional) conduit box (CB-TP12/15) (**C** in FIG. 39) where the necessary cables are threaded through for connection to the touch panel.
3. Thread the incoming RJ-45, Ethernet, and any other audio/video wiring through the knockouts. Refer to the *Wiring Guidelines for the 1200VG and 1500VG Panels* section on page 68 for pinout descriptions. Leave enough slack in the wiring to accommodate any re-positioning of the panel.
4. **Install the drywall/sheetrock before inserting the main NXD unit into the CB-TP12/15**.

Installation of the NXD Touch Panel

The NXD panel can be installed either directly into the (optional) CB-TP12/15 or other solid surface environment using the two different mounting options: drywall clips or solid surface screws. The following sections describe mounting the touch panel directly into a pre-wall installed conduit box, a solid surface or drywall, and optional NXA-RK Rack Mount Kit.

Installing the NXD panel within a Conduit Box

The conduit box must be mounted prior to continuing this section. Refer to the procedures in the *Pre-wall Installation of the Conduit Boxes* section on page 58 for detailed pre-wall installation instructions. Verify that all necessary cables have been threaded through the knockouts on the conduit box and the connections have been tested prior to installation of the NXD panel.

1. Remove the magnetic faceplate/bezel (**A** in FIG. 39) from the main NXD unit (**B** in FIG. 39) by gripping the faceplate and pulling with gentle outward force.

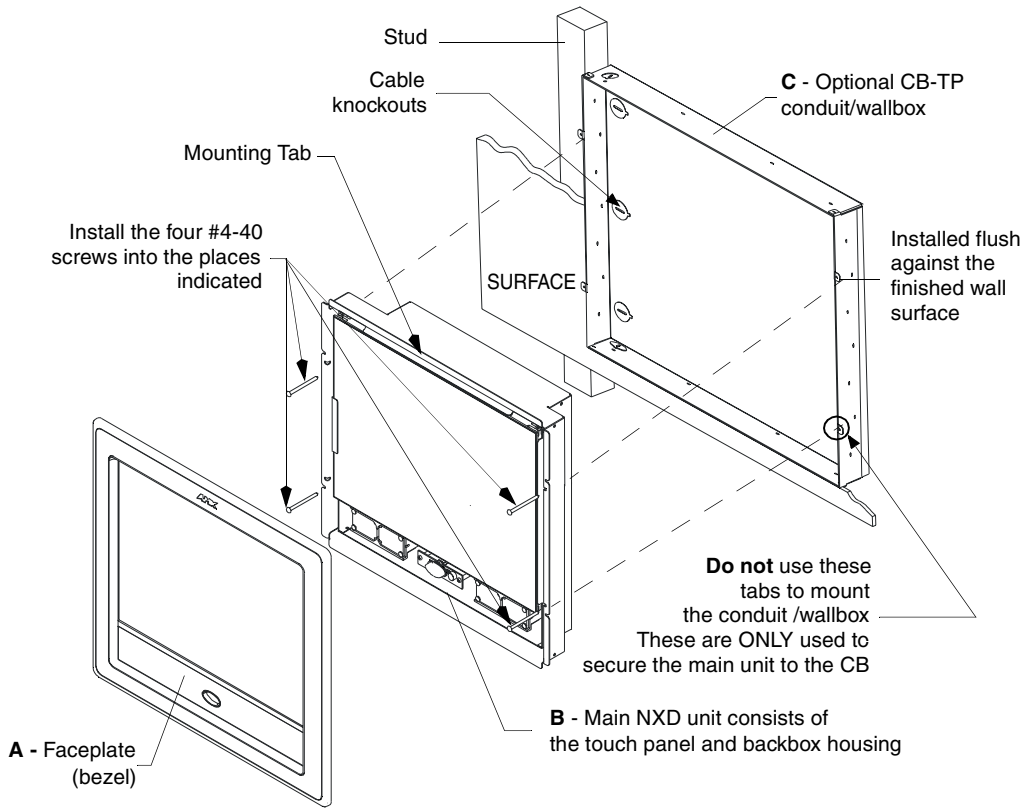

FIG. 39 Wall Mount panel installation configuration for pre-existing conduit/wallbox in a pre-wall construction

2. Verify the incoming RJ-45, Ethernet, USB, and any other audio/video cables have been properly threaded through the wiring knockouts (from their terminal locations) on the conduit box. Leave enough slack in the wiring to accommodate any re-positioning of the panel.
3. Connect all data and power wiring connectors to their corresponding locations along the side of the (un-powered) NXD touch panel.
   - Verify the terminal end of the power cable is not connected to a power supply before plugging in the 2-pin power connector.
   - The USB connectors can be from either a USB extension cable, or a wireless USB RF transmitter.

4. Test the incoming wiring by connecting the panel connections to their terminal locations and applying power. Verify the panel is receiving power and functioning properly to prevent repetition of the installation.
5. Disconnect the terminal end of the power cable from the connected power supply.

NOTE

Don't disconnect the connectors from the touch panel. The unit must be installed with the attached connectors before being inserted into the conduit box.

6. Carefully slide the main unit (**B** in FIG. 39) into the conduit box, so that all Mounting Tabs lie flush against the conduit box (**C** in FIG. 39).
7. Insert and secure the four securing #4-40 Mounting Screws into their corresponding holes located along the sides of the NXD (FIG. 38 and FIG. 39).
8. Place the magnetic faceplate (**A** in FIG. 39) back onto the main NXD unit (**B** in FIG. 39). *Make sure to align the Microphone, Light, and PIR Motion sensor locations to their respective openings on the front bezel/faceplate.*
9. Reconnect the terminal RJ-45, Ethernet, USB, and any optional audio/video wiring to their respective locations (*outside the conduit box*) on either the NXA-AVB/RGB Breakout Box, Ethernet port, or NetLinx Master.
10. Reconnect the terminal power connector on the 12 VDC-compliant power supply and apply power.

Installing the NXD into drywall using Expansion Clips

Expansion clips are mounted through the four oval holes located at the top and bottom of the panel. As the screw is tightened, the clip bends toward the insertion hole and into the wall. This bending creates a "grip" on the wall by either pressing onto the wall or by securing the drywall between the housing and the drywall clip.

The most important thing to remember when mounting the NXD is that the outer frame (Mounting Tabs) must be installed flush against the mounting surface.

- It is recommended that you cutout the surface slightly smaller than what is outlined in the installation drawings so that you can make any necessary cutout adjustments.

1. Prepare the area by removing any screws or nails from the drywall before beginning the cutout process.
2. Cut out the surface for the ***12-inch Wall Mount*** using the dimensions shown in FIG. 40 and for the ***15-inch Wall Mount*** using the dimensions shown in FIG. 41. Be sure to cut out the four notches along the top and bottom areas to accommodate the four drywall expansion clips (provided).

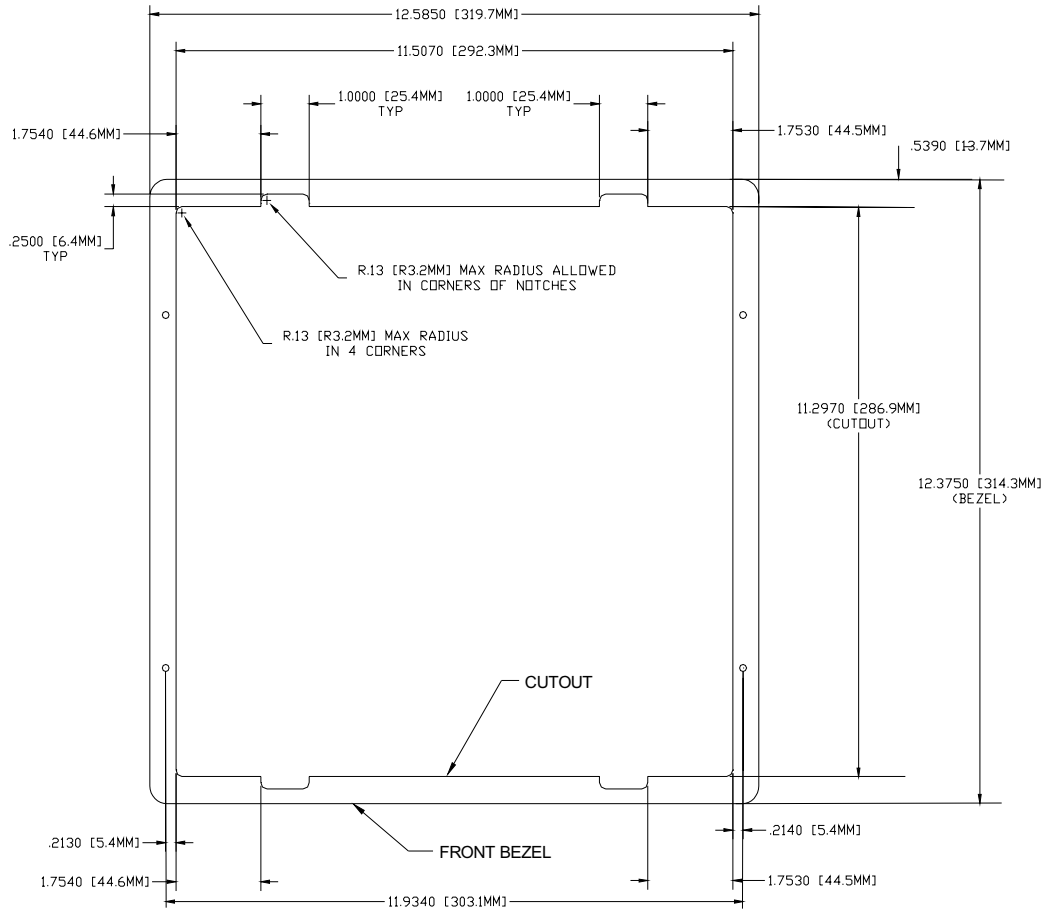

FIG. 40 NXD-1200VG 12-inch Wall Mount panel dimensions using expansion clips

3. Remove the magnetic faceplate/bezel (**A** in FIG. 42) from the main NXD unit (**B** in FIG. 42) by gripping the faceplate and pulling with gentle outward force.
4. Thread the incoming RJ-45, Ethernet, USB, and any other audio/video wiring (from their terminal locations) through the cutout opening. Refer to the *Wiring Guidelines for the 1200VG and 1500VG Panels* section on page 68 for pinout descriptions. *Leave enough slack in the wiring to accommodate any re-positioning of the panel*.
5. Connect all data and power wiring connectors to their corresponding locations along the side of the (un-powered) NXD touch panel.
   - Verify the terminal end of the power cable is not connected to a power supply before plugging in the 2-pin power connector.
   - The USB connectors can be from a either a USB extension cable, or a wireless USB RF transmitter.
6. Test the incoming wiring by attaching the panel connections to their terminal locations and applying power. Verify the panel is receiving power and functioning properly to prevent repetition of the installation.
7. Disconnect the terminal end of the power cable from the connected power supply.

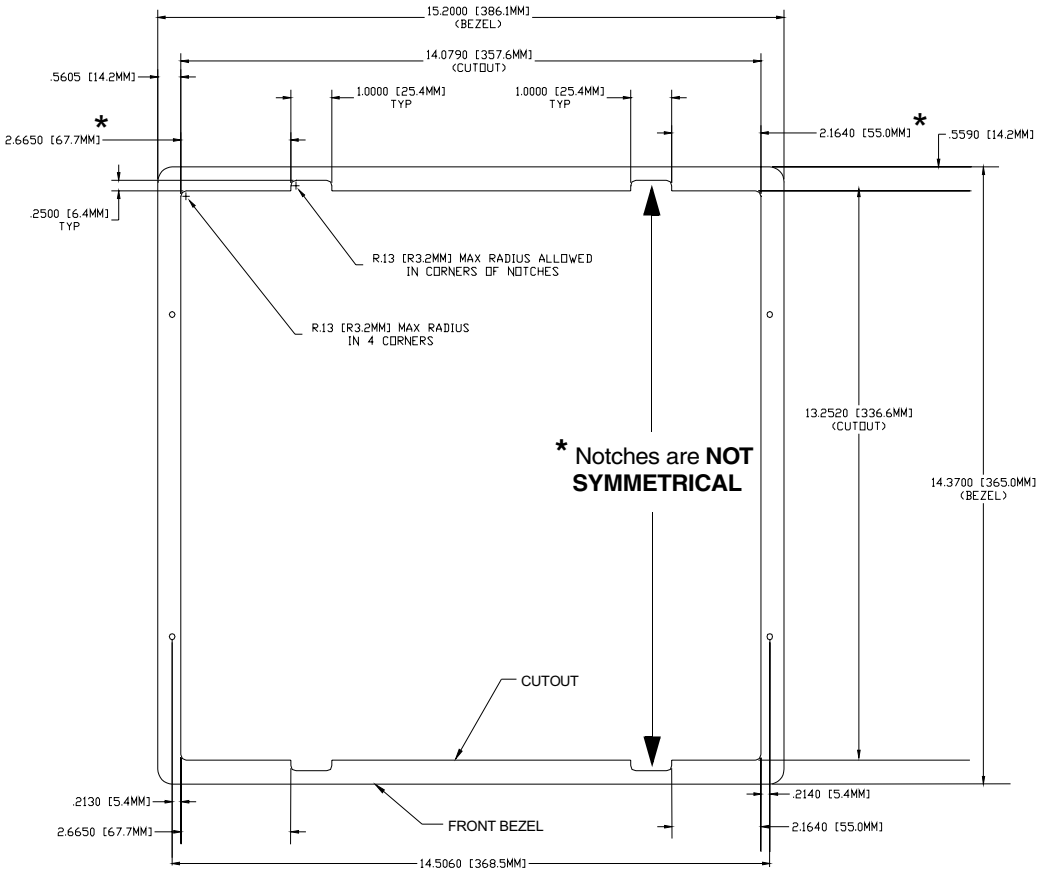

FIG. 41 NXD-1500VG 15-inch Wall Mount panel dimensions using expansion clips

NOTE

Don't disconnect the connectors from the touch panel. The unit must be installed with the attached connectors before being inserted into the drywall.

8. Insert the four sets of drywall screws and expansion clips into the four oval notch locations along the top/bottom edges of the main unit (FIG. 41).

9. Carefully insert the main unit (with expansion clips) into the cutout until the Mounting Tabs on the NXD unit lie flush against the wall (FIG. 41).

10. Tighten the drywall clip sets (screws and clips) until the Mounting Tabs are securely fastened and flush against the wall.

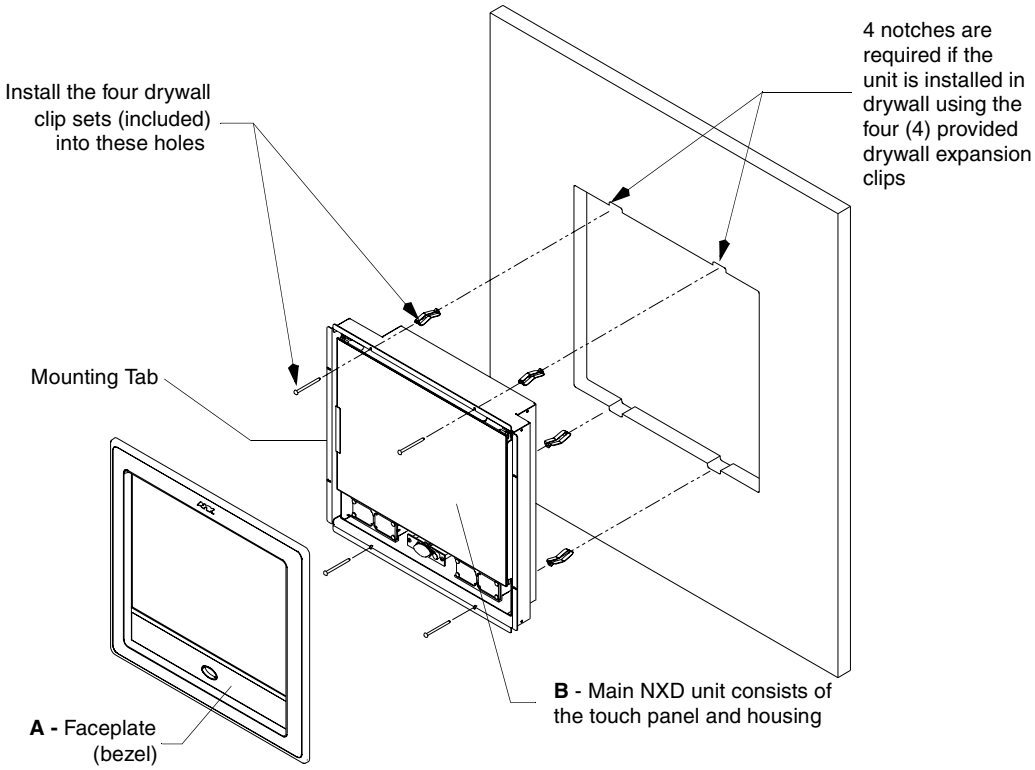

FIG. 42 Wall Mount panel (NXD) installation configuration for drywall surfaces

WARNING

The drywall clip set must be re-ordered from AMX if the drywall clip is bent accidentally during an installation or removed during a re-installation.

11. Place the magnetic faceplate (**A** in FIG. 42) back onto the main NXD unit (**B** in FIG. 42). *Make sure to align the Microphone, Light, and PIR Motion sensor locations to their respective openings on the front bezel/faceplate.*
12. Connect the terminal RJ-45, Ethernet, USB, and any optional audio/video wiring to their respective locations on either the NXA-AVB/RGB Breakout Box, Ethernet port, or NetLinx Master.
13. Reconnect the terminal power connector on the 12 VDC-compliant power supply and apply power.

Installing the NXD into a Flat Surface using #4 screws

Mounting screws (#4, not included) are secured through circular holes located at the left and right sides of the NXD panel. **The most important thing to remember when mounting the NXD is that the outer frame (Mounting Tabs) must be installed flush against the mounting surface.**

- It is recommended that you cutout the surface slightly smaller than what is outlined in the installation drawings so that you can make any necessary cutout adjustments.

1. Prepare the area by removing any screws or nails from the surface before beginning the cutout process.
2. Cut out the surface for the ***12-inch Wall Mount*** using the dimensions shown in FIG. 43 and for the ***15-inch Wall Mount*** using the dimensions shown in FIG. 44.

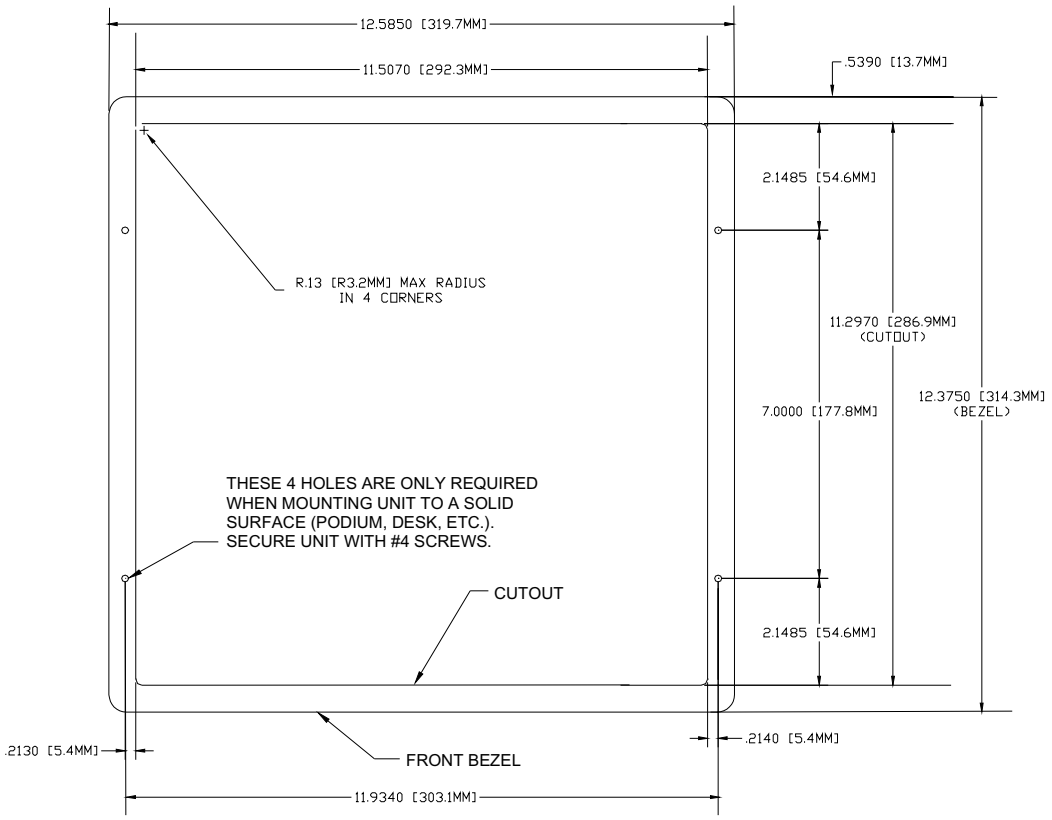

FIG. 43 NXD 12-inch Wall Mount panel dimensions using #4 mounting screws

3. Remove the magnetic faceplate/bezel (**A** in FIG. 45) from the main NXD unit (**B** in FIG. 45) by gripping the faceplate and pulling with gentle outward force.
4. Thread the incoming RJ-45, Ethernet, USB, and any other audio/video wiring (from their terminal locations) through the cutout opening. Refer to the *Wiring Guidelines for the 1200VG and 1500VG Panels* section on page 68 for pinout descriptions. *Leave enough slack in the wiring to accommodate any re-positioning of the panel.*

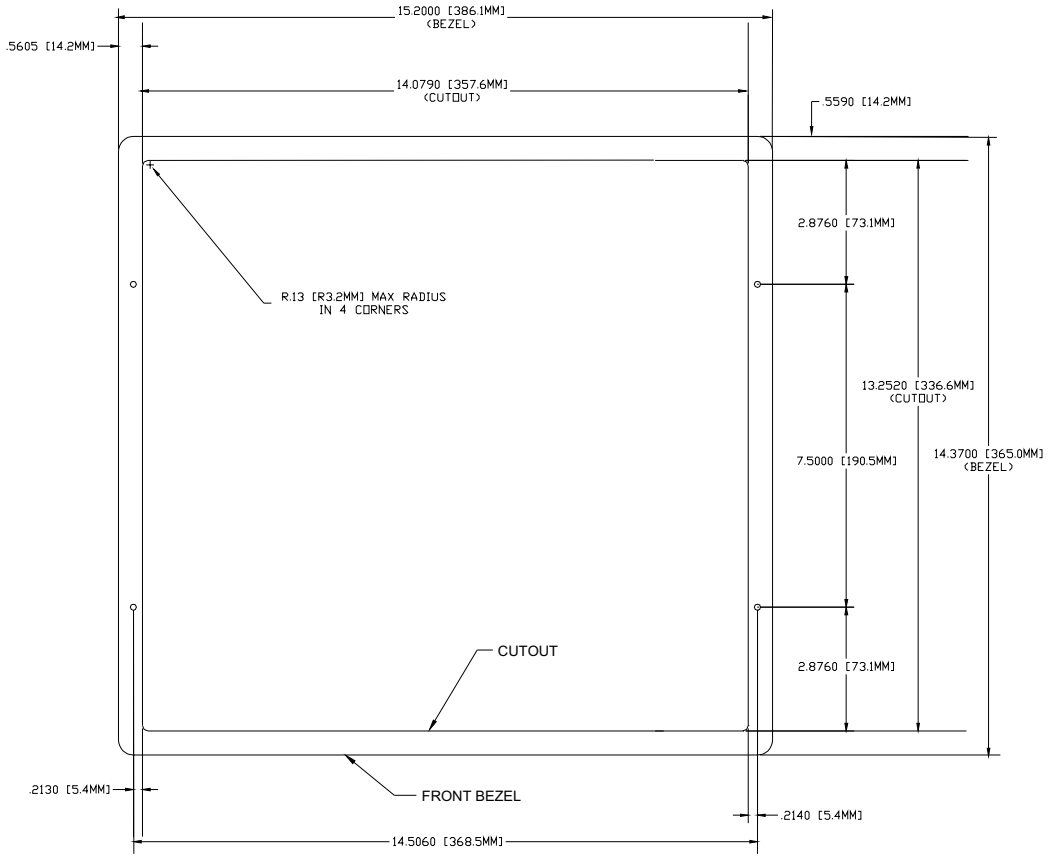

FIG. 44 NXD 15-inch Wall Mount panel dimensions using #4 mounting screws

5. Connect all data and power wiring to their corresponding locations along the side of the (un-powered) NXD touch panel.
   - Verify the terminal end of the power cable is not connected to power supply before plugging in the 2-pin power connector.
   - The USB connectors can be from a either a USB extension cable, or a wireless USB RF transmitter.
6. Test the incoming wiring by connecting the panel connections to their terminal locations and applying power. Verify the panel is receiving power and functioning properly before finalizing the installation.
7. Disconnect the terminal end of the power cable from the power supply.

NOTE

Don't disconnect the connectors from the touch panel. The unit must be installed with the necessary connectors before being inserted into the solid surface.

8. Carefully slide the main unit into the cutout until the Mounting Tabs of the NXD unit lie flush against the wall.
9. Insert and secure the four #4 screws into their corresponding holes located along the sides of the NXD (using a grounded Phillips-head screwdriver) until the unit is secure and flush against the wall.
10. Reinstall the magnetic faceplate (**A** in FIG. 45) back onto the main NXD unit (**B** in FIG. 45). *Make sure to align the Microphone, Light, and PIR Motion sensor locations to their respective openings on the front bezel/faceplate.*

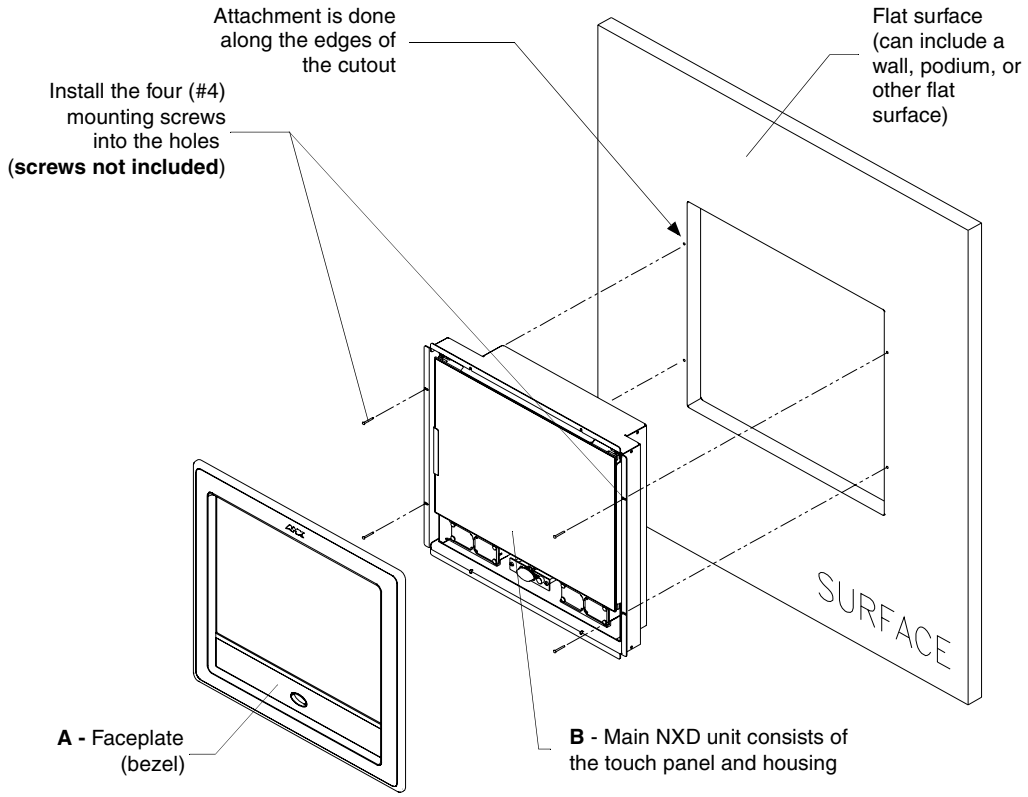

FIG. 45 Wall Mount panel installation configuration for flat/solid surfaces

11. Reconnect the terminal RJ-45, Ethernet, USB, and any optional audio/video wiring to their respective locations on either the NXA-AVB/RGB Breakout Box, Ethernet port, or NetLinx Master.
12. Reconnect the terminal power connector on the 12 VDC-compliant power supply and apply power.

Installing an NXD into an (optional) Rack Mount Kit (NXA-RK12 or NXA-RK15)

1. Remove the magnetic faceplate/bezel from the main NXD unit by gripping the faceplate and pulling with gentle outward force.
2. Thread the incoming RJ-45, Ethernet, USB, and any optional audio/video wiring through the opening in the equipment rack (from their terminal locations). Refer to the *Wiring Guidelines for the 1200VG and 1500VG Panels* section on page 68 for pinout descriptions. Leave enough slack to accommodate any re-positioning of the panel.
3. Connect all data and power wiring connectors to their corresponding locations along the side of the (un-powered) NXD touch panel.
   - Verify the terminal end of the power cable is not connected to a power supply before plugging in the 2-pin power connector.
   - The USB connectors can be from a either a USB extension cable, or a wireless USB RF transmitter.
4. Test the incoming wiring by connecting the panel connections to their terminal locations and applying power. Verify the panel is receiving power and functioning properly to prevent repetition of the installation.
5. Disconnect the terminal end of the power cable from the connected power supply.

NOTE

Don't disconnect the connectors from the touch panel. The unit must be installed with the necessary connectors before being inserted into the equipment rack.

6. Insert the main 12-inch Modero unit into an NXA-RK12 (FIG. 46) or the 15-inch Modero into an NXA-RK15 (FIG. 47).

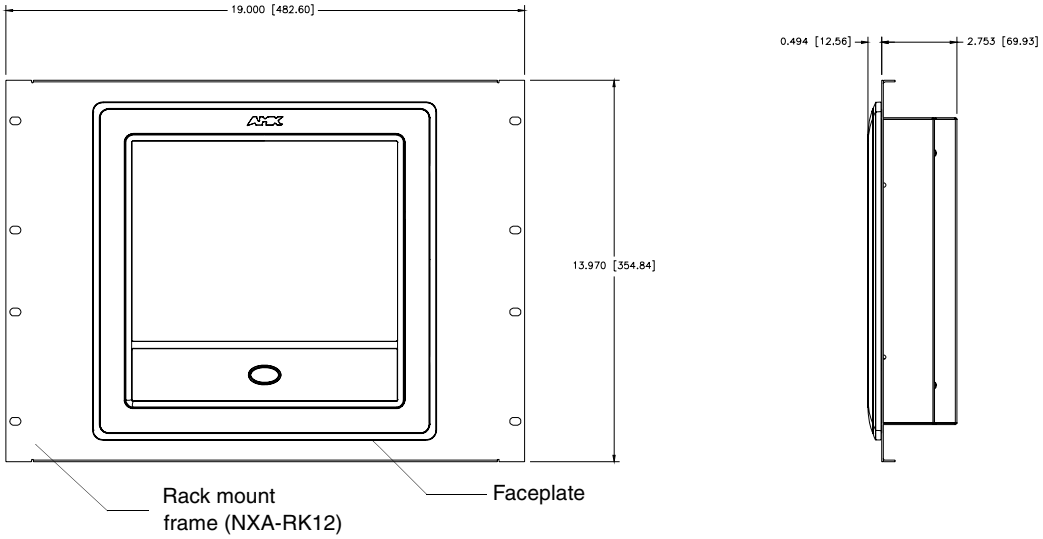

FIG. 46 NXD 12 inch Wall Mount panel installed into an NXA-RK12 Rack Mount Kit

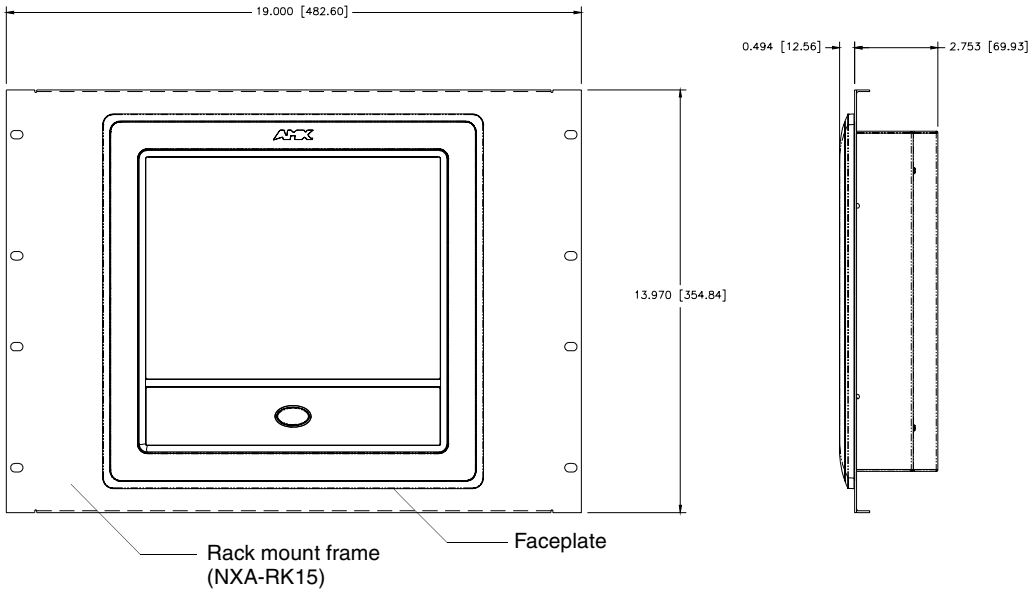

FIG. 47 NXD 15 inch Wall Mount panel installed into an NXA-RK15 Rack Mount Kit

7. Secure the panel to the NXA-RK frame by first inserting and then tightening the four #4-40 screws (provided). Line up the four mounting holes and use a grounded Phillips-head screwdriver to tighten the screws in a clockwise direction.

8. Insert the NXA-RK (with connected NXD unit) into the equipment rack, making sure to align the screw holes along the sides on the NXA-RK with the holes in the equipment rack.

9. Use a grounded Phillips-head screwdriver to secure the NXA-RK (with connected NXD unit) to the equipment rack using #10-32 screws (not included).
10. Place the magnet faceplate back onto the main NXD unit by gripping the faceplate and placing it on the housing with gentle force. *Make sure to align the Microphone, Light, and PIR Motion sensor locations to their respective openings on the front bezel/faceplate.*
11. Reconnect the terminal RJ-45, Ethernet, USB, and any optional audio/video wiring to their respective locations on either the NXA-AVB/RGB Breakout Box, Ethernet port, or NetLinx Master.
12. Reconnect the terminal power connector on the 12 VDC-compliant power supply and apply power.

Wiring Guidelines for the 1200VG and 1500VG Panels

These Modero panels use a 12 VDC-compliant power supply to provide power to the panel via the 2-pin 3.5 mm mini-Phoenix PWR connector. Use the previously referenced power requirements to determine the power draw.

The incoming PWR and GND wires from the power supply must be connected to the corresponding locations within the PWR connector.

CAUTION

These units should only have one source of incoming power. Using more than one source of power to the touch panel can result in damage to the internal components and a possible burn out.
*Apply power to the panels **only after** installation is complete.*

Preparing captive wires

You will need a wire stripper and flat-blade screwdriver to prepare and connect the captive wires.

WARNING

Never pre-tin wires for compression-type connections.

1. Strip 0.25 inch (6.35 mm) of insulation off all wires.
2. Insert each wire into the appropriate opening on the connector (according to the wiring diagrams and connector types described in this section).
3. Tighten the screws to secure the wire in the connector. *Do not tighten the screws excessively; doing so may strip the threads and damage the connector.*

Wiring a power connection

To use the 2-pin 3.5 mm mini-Phoenix connector with a 12 VDC-compliant power supply, the incoming PWR and GND wires from the external source must be connected to their corresponding locations on the connector (FIG. 48).

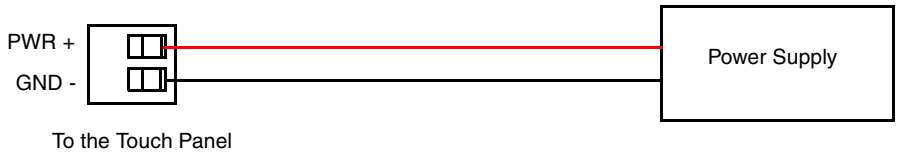

FIG. 48 NetLinx power connector wiring diagram

1. Insert the PWR and GND wires on the terminal end of the 2-pin 3.5 mm mini-Phoenix cable. ***Match the wiring locations of the +/- on both the power supply and the terminal connector.***
2. Tighten the clamp to secure the two wires. *Do not tighten the screws excessively; doing so may strip the threads and damage the connector.*

3. Verify the connection of the 2-pin 3.5 mm mini-Phoenix to the power supply.

Audio/Video Port: Connections and Wiring

The following table shows the signal and pinout/pairing information used on the RJ-45 Audio and Video connections.

Audio/Video RJ-45 Pinout Information

Pin	Wire Color	Function	Polarity
1	Orange/White	Right Audio In	+
2	Orange	Right Audio In	-
3	Green/White	Video In	-
4	Blue	Mic Out	-
5	White/Blue	Mic Out	+
6	Green	Video In	+
7	White/Brown	Left Audio In	+
8	Brown	Left Audio In	-

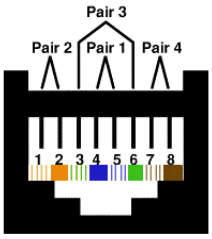

TIA 568B

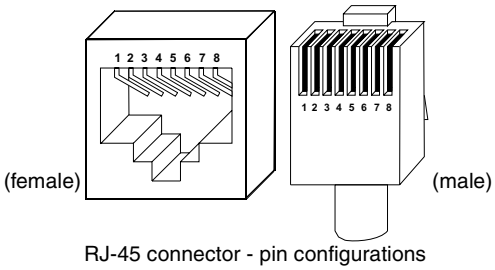

RJ-45 connector - pin configurations

Refer to the *Installing CAT5 Suppression Ferrites* section on page 30 for detailed information on how to install the necessary number of CAT5 Suppression Ferrites on the Black A/V RJ-45 cable connected to the panel.

Ethernet/RJ-45 Port: Connections and Wiring

FIG. 49 describes the blink activity for the Ethernet 10/100 Base-T RJ-45 connector and cable. The Ethernet cable is connected to the rear of Table Top and side of the Wall Mount panels.

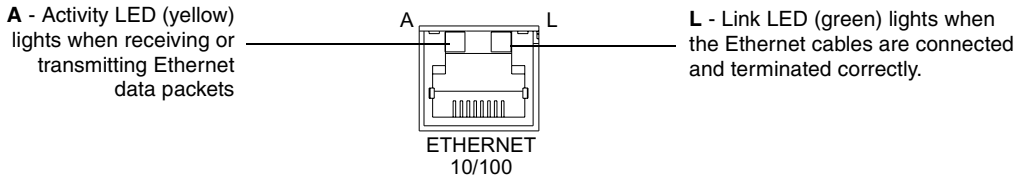

FIG. 49 Layout of Ethernet LEDs

The following table lists the pinouts, signals, and pairing associated with the Ethernet connector.

Ethernet RJ-45 Pinouts and Signals				
Pin	Signals	Connections	Pairing	Color
1	TX +	1 --------- 1	1 --------- 2	Orange-White
2	TX -	2 --------- 2		Orange
3	RX +	3 --------- 3	3 --------- 6	Green-White
4	no connection	4 --------- 4		Blue
5	no connection	5 --------- 5		Blue-White
6	RX -	6 --------- 6		Green
7	no connection	7 --------- 7		Brown-White
8	no connection	8 --------- 8		Brown

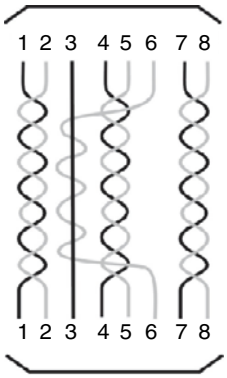

FIG. 50 diagrams the RJ-45 pinouts and signals for the Ethernet RJ-45 connector and cable.

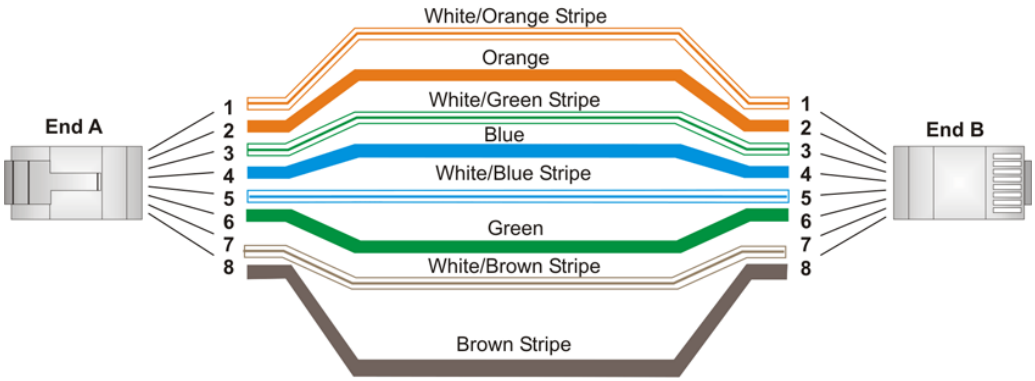

FIG. 50 RJ-45 wiring diagram

Installation Procedures: 17" Panels

Overview

NXT panels are mounted onto flat (horizontal) surfaces in either a stand-alone or combo (NXT atop an NXA-BASE/B battery base) configuration. NXD panels are installed into either a pre-wall surface (using the CB-TP17 conduit/wallbox) or a solid surface (using either solid surface or drywall screws).

Unpacking the Panel

1. Inspect and confirm the contents of the shipment box to verify that you have all specified parts. Refer to the *Specifications* section on page 12 for more information about included accessories and other AMX equipment.
2. Carefully remove the panel from the shipping box.
3. Carefully peel the protective plastic cover from the LCD.

NOTE

If the protective plastic LCD cover is not removed, the panel may not respond properly to touch points on the LCD or allow proper screen calibration.

Installing the Internal Components

Installation of the internal components such as the NXA-PCI80211G Wireless card and NXA-RGB Interface card are described in detail within the following sections:

- *Step 2: Install the 802.11g mini-PCI Wireless Card* section on page 38.
- *Step 3: Install the NXA-RGB Card Component (NXT)* section on page 39.

Upgrading the Back Box with the MB-TP17 VESA Housing

Upgrading the existing back box with the new VESA Mounting Kit (**FG033-50**) requires 3 main processes:

- Removing the pre-existing back box and installing the new VESA back box.
- Threading cables through the strain relief grommet opening in the rear plastic cover.
- Finalizing the installation of the NXD (with VESA back box and cables) into the plastic cover, securing both components, and finalizing the strain relief grommet installation.

NOTE

The new MB-TP17 Universal VESA Mounting Box uses a standard VESA installation pattern of 75 mm between holes. VESA mounts that conform to this pattern can be used on the MB-TP17 Housing.

Removing the Original Modero Back Box

1. Detach all connectors from the side of the touch panel.
2. Remove the magnetic faceplate from the NXD-1700VG unit by gripping the faceplate and pulling outwards while applying a small amount of pressure to remove it from the main unit.
3. Place the LCD face-down on a soft cloth to expose the back of the panel and prevent scratching of the LCD.

WARNING

***DO NOT REMOVE THE PANEL SECURING SCREWS**. These screws secure the LCD to the metallic casing underneath.*

4. Unscrew the Stereo Output nut from the Stereo Output jack.
5. Remove the I/O connector plate by using a grounded Phillips-head screwdriver to remove the two screws and slide the I/O connector plate away from the back box housing.
6. Remove the four pan-head Housing Screws from the rear of the NXD unit (FIG. 51). These screws secure the back box to the internal panel casing.

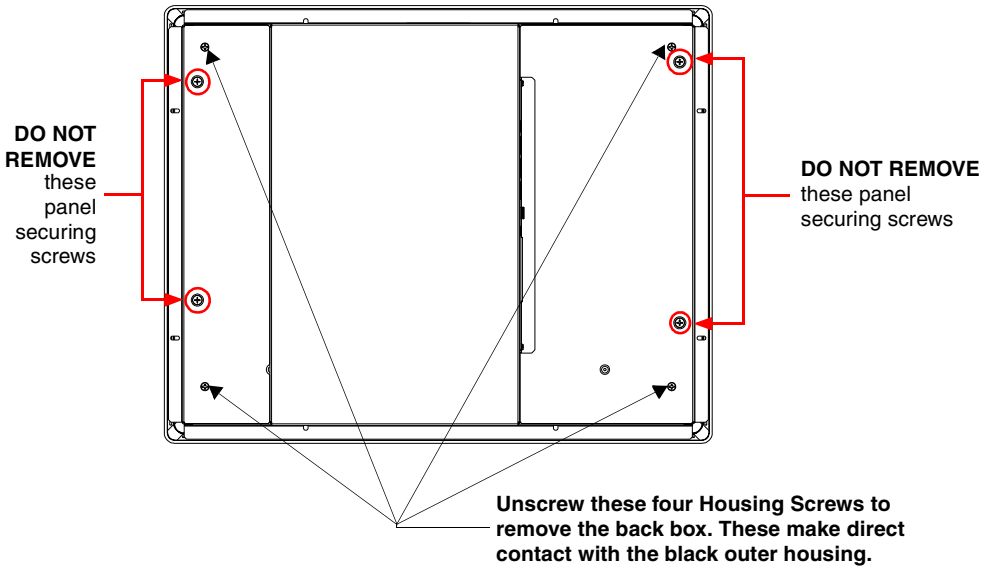

FIG. 51 Location of the attachment screws on the NXD back box

WARNING

***DO NOT REMOVE THE FOUR PANEL SECURING SCREWS**. These screws secure the LCD to the metallic casing underneath.*

7. Lift the back box housing to separate it from the internal panel casing.

Installing the MP-TP17 Back Box

1. Unscrew the four pan-head Housing Screws (#8-32) from the MB-TP17 rear plastic cover.
2. Gently place the MB-TP17 back box over the internal panel casing (with the cable routing hole on the right-side of the panel).
3. Re-install and secure the four pan-head Housing Screws into their pre-drilled holes along the edges of the MB-TP17 back box (FIG. 52) and secure them using a grounded Phillips-head screwdriver.
4. Place the I/O connector plate back over the connector opening and align the connector locations.
5. Resecure the I/O connector plate (using a grounded Phillips-head screwdriver) and resecure the Stereo Output nut on the Stereo Output jack.

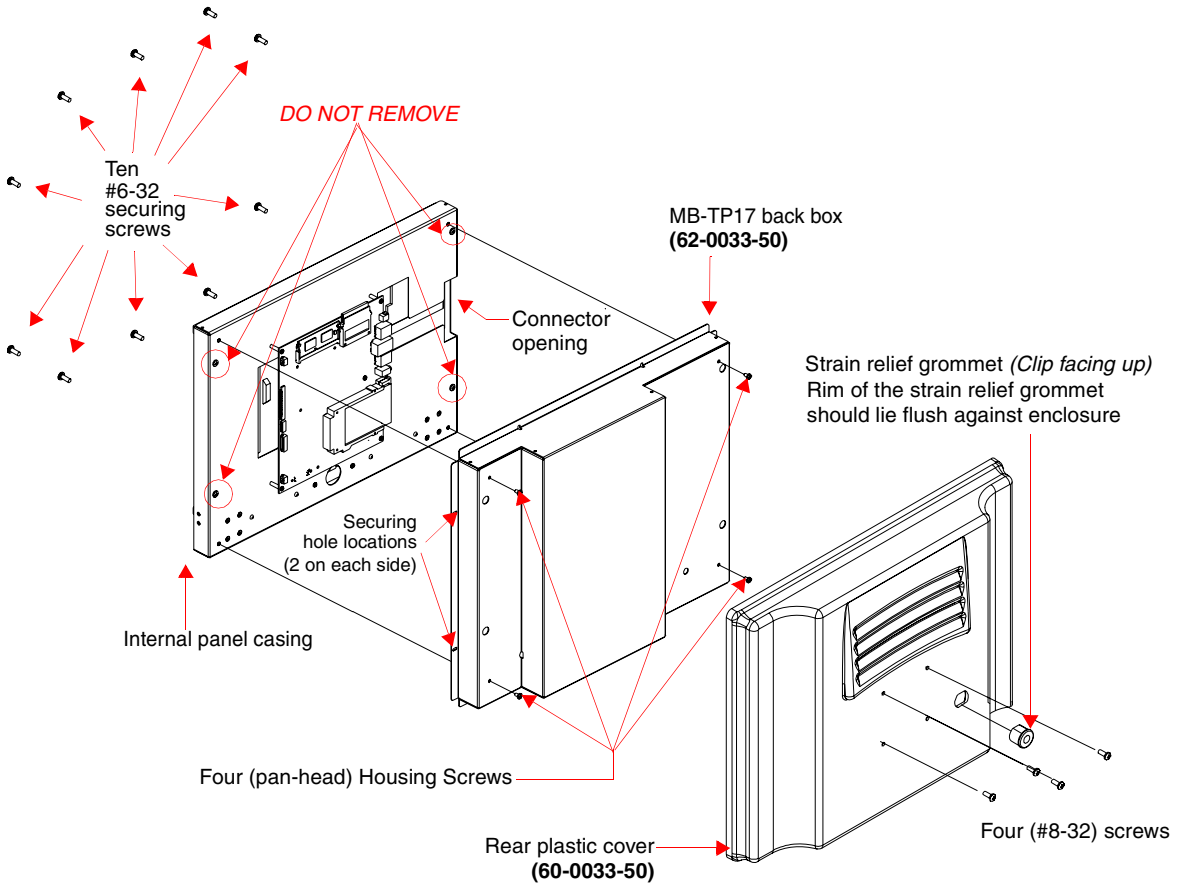

FIG. 52 Location of the attachment screws on the NXD back box and VESA housing

Cable Installation for the MP-TP17 Back Box

1. Connect the cable connectors (RJ-45, Ethernet, and any other audio/video wiring) to their respective locations along the side of the touch panel.
2. Use the tie-wrap (45-0009A) to wrap the cables together inside the VESA Mount enclosure. This cable tie is used to insure the cable will not pull through or work itself through the new larger strain relief grommet (45-0032-01) over time.
3. Thread the incoming cables through the hole on the rear plastic cover and then through the strain relief grommet.
4. Slide the grommet along the cable and securely insert it into the opening on the rear plastic cover (FIG. 52).

Finalizing the installation

1. Gently place the rear plastic cover over the NXD panel (with LCD and MB-TP17 back box).
2. Insert the protruding cables, coming out from the opening on the rear plastic cover, into the open strain relief grommet.
3. Allow some slack/length on these cables as a service loop. This service loop provides enough cable length so you can later remove the NXD (with connected cables) from the rear plastic cover.

WARNING

VERIFY THE LENGTH AND LOCATION OF THE INSERTED CABLES. ONCE THE STRAIN RELIEF GROMMET IS CLOSED, IT IS DIFFICULT TO RE-OPEN.

4. Carefully apply pressure to close the strain relief grommet over the desired cable location.

CAUTION

Verify the Strain Relief Grommet is securely closed over the cables and the clip is facing the correct direction (upwards). The process of securing the strain relief grommet may require the use of pliers. Also verify the length and location of the inserted cables. Once the strain relief grommet is closed, it is difficult to re-open.

5. Firmly push the Strain Relief Grommet into the opening (toward the inside) until the rim is securely flush against the back of the rear plastic cover (FIG. 53).
6. Securely grasp both sides of the NXD panel (with LCD, MB-TP17 back box, and attached cables), rotate the entire unit over, and lie it on a flat level surface.
7. Note the available mounting contact surface area on the rear plastic cover (FIG. 53). This area represents the space available for use with a VESA connector plate.

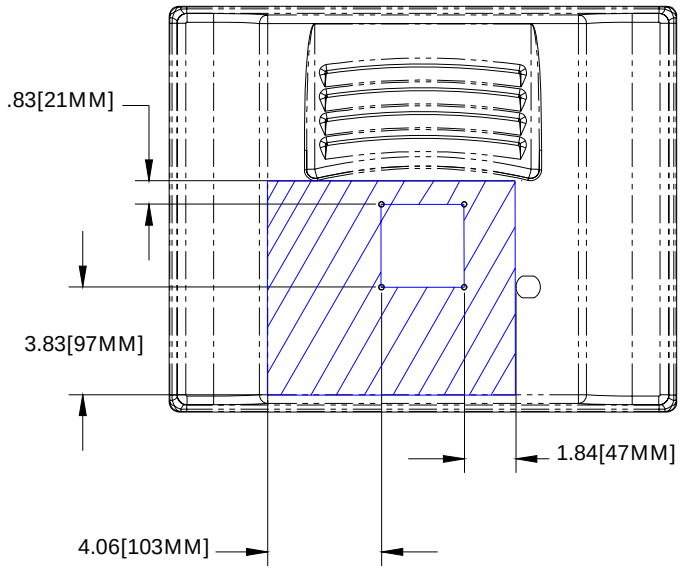

FIG. 53 MB-TP17 Mounting contact surface area

8. Insert and secure the ten #6-32 securing screws into their pre-drilled holes along the edges of the NXD unit (FIG. 52). This step secures the NXD unit to the rim of the rear plastic cover.
9. Align a VESA mount connector (purchased separately) to the four #8-32 screw holes on the back of the rear plastic cover (FIG. 53).
10. Insert the four provided #8-32 screws through the VESA mount's four holes and then into the pre-drilled holes on the rear plastic cover.

CAUTION

When installing a VESA mount to the rear plastic cover, use only the AMX provided #8-32 screws.

11. Secure these four #8-32 screws to the rear plastic cover by using a grounded Phillips-head screwdriver. This step secures the VESA mount to the rear of the panel.

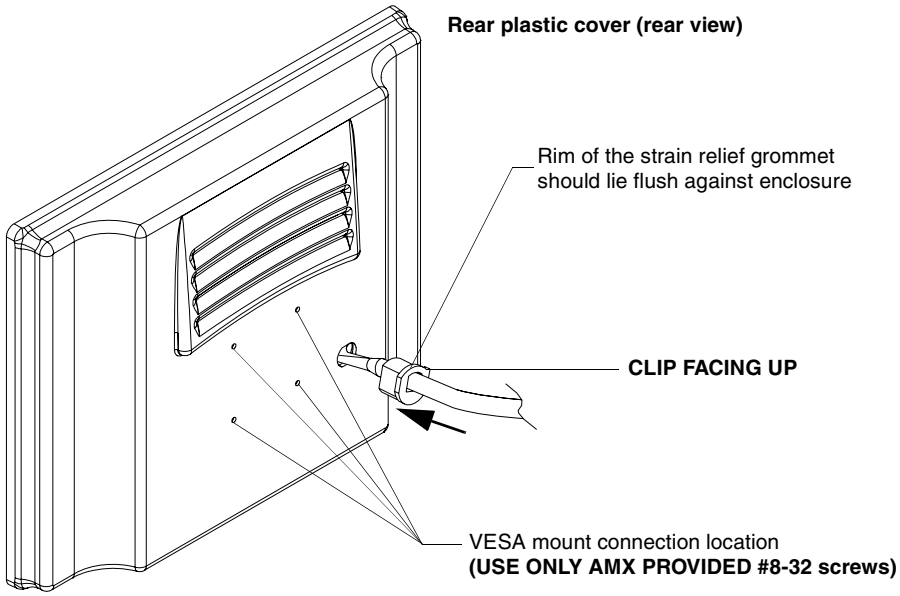

FIG. 54 Installation of grommet into the rear plastic enclosure

Refer to your particular VESA mount manufacturer's installation procedures for further surface mounting procedures.

Pre-wall Installation of the CB-TP17 Conduit Box

Wall Mount panels (NXDs) are contained within a metallic outer housing (back box). This back box is **not removed** when installing the NXD into a Conduit Box (CB-TP17). The back box is ***only*** removed to gain access for the replacement of the Compact Flash component or upgrade to the VESA housing.

WARNING

INSTALLER: LEAVE A GAP BETWEEN THE STUD AND CONDUIT BOX TO ACCOMMODATE THE DRYWALL/SHEETROCK*. This gap allows the installation of the drywall/sheetrock after the CB-TP17 has been mounted onto the beams.*

The CB-TP17 Conduit/wallbox is an optional metallic box that is secured onto a beam in a **pre-wall** setting (*where no walls or present*). Installation procedures and configurations can vary. This section describes the installation procedures for the most common installation scenario.

NOTE

The stud notching and conduit box installation must be done prior to any wall installation.

The most important thing to remember when mounting this conduit box is that the mounting tabs must be mounted flush against the outside of the sheetrock. This step determines whether or not the mounting stud is notched (*cutout-out to fit the conduit box*).

1. Measure the distance between the inside of the two selected stud beams. Most beams have a distance of about 14" to 16". This is too narrow to accommodate the 17.072" (43.36 cm) wide CB-TP17 conduit box.
2. Determine whether one or both of the selected stud beams must be notched (FIG. 55). The determining factor is the flush alignment of the mounting tabs along the outside of the **post-wall** sheetrock.

3. Cutout the notched beam using a height of 13.554" (34.43 cm) (as shown below in FIG. 55) and a depth ***equal to the thickness of the drywall***.

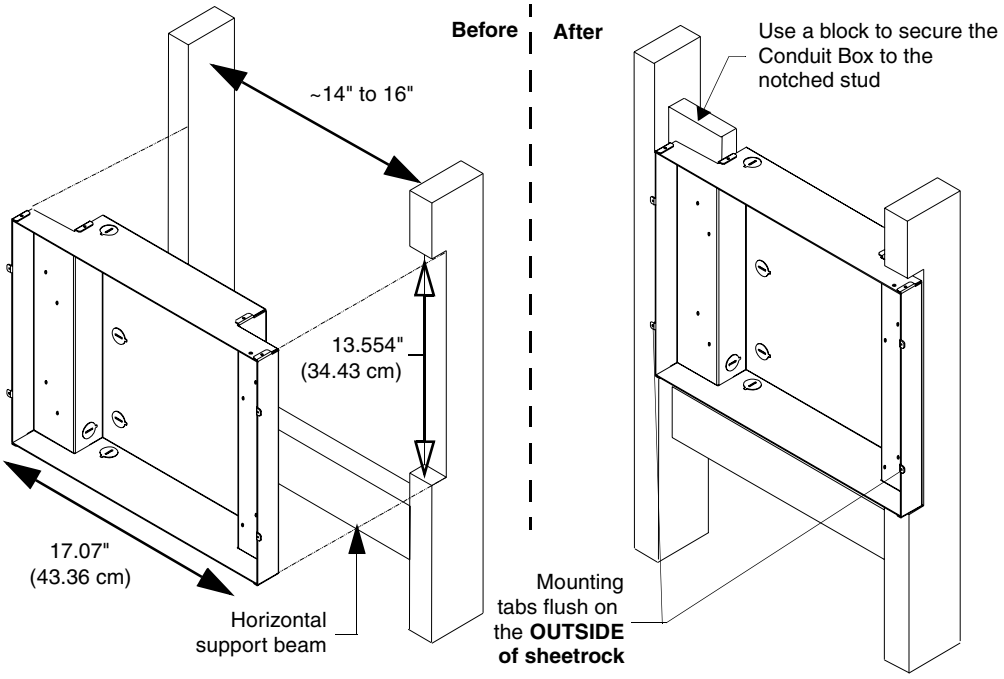

FIG. 55 CB-TP17 conduit box installation into a notched stud (showing before and after installation)

NOTE

*The determining factor in the depth of the cut into the beam is the thickness of the drywall. The mounting tabs **MUST BE FLUSH** against the drywall and therefore, the depth of the notch depends on that thickness.*

4. Insert one side of the conduit box into the indention on the notched stud and rest the other side of the box against the opposite beam.
5. Install and secure a shorter horizontal beam below the conduit box. This beam acts to support the weight of the box from below and should be secured to both vertical beams (at the sides).
6. Fasten the CB-TP17 to the **Notched stud/beam** through the stud fastening holes, located on the inside of the conduit box (FIG. 56), by using either nails or screws.
7. Insert a perpendicular block between the **Non-Notched stud/beam** and the Conduit Box. This block acts as a bridge to secure the stud/beam to the CB-TP17 along the stud fastening holes located inside of the box.
8. Secure the perpendicular block to the **Non-Notched stud/beam** (FIG. 56) by using either nails or screws.
9. Fasten the CB-TP17 to the **block** through the stud fastening holes, located on the inside of the Conduit Box (FIG. 56), by using either nails or screws.
10. Remove any necessary wiring knockouts from the (optional) conduit box (CB-TP17) (FIG. 56) where the necessary cables are threaded through for connection to the touch panel.
11. Thread the incoming RJ-45, Ethernet, and any other audio/video wiring through the knockouts (***use of the top or bottom knockouts are recommended with this installation***). Refer to the *Wiring Guidelines for the 1700VG Panels* section on page 87 for pinout descriptions. Leave enough slack in the wiring to accommodate any re-positioning of the panel.
12. Install the drywall/sheetrock before inserting the main NXD unit into the CB-TP17.

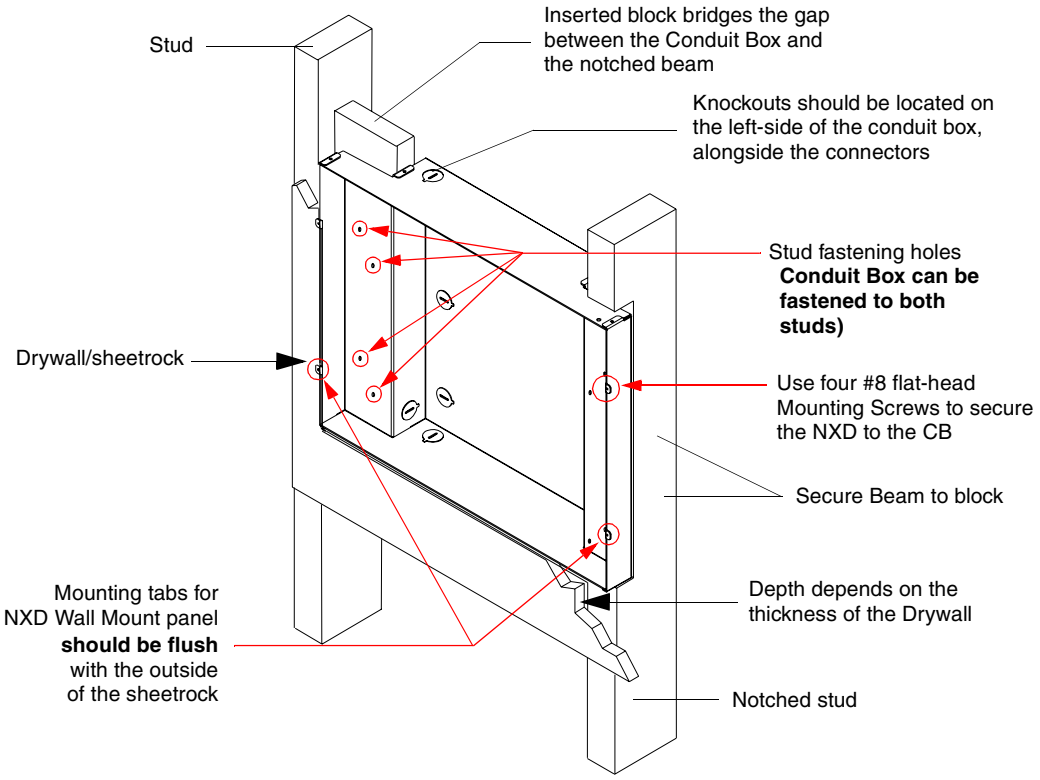

FIG. 56 Screw locations for conduit box attachment in a pre-wall installation

Installation of an NXD-1700VG

The NXD-1700VG can be installed either directly into the (optional) CB-TP17 or other solid surface environment using the two different mounting options: drywall clips or solid surface screws. The following sections describe mounting the touch panel directly into an installed pre-wall Conduit Box, a solid surface or drywall, and optional NXA-RK17 Rack Mount Kit.

Installing the NXD-1700VG within a CB-TP17 Conduit Box

The conduit box must be mounted prior to continuing this section. Refer to the procedures in the *Pre-wall Installation of the CB-TP17 Conduit Box* section on page 75 for detailed pre-wall installation instructions. Verify that all necessary cables have been threaded through the knockouts on the conduit box and the connections have been tested prior to installation of the NXD-1700VG.

1. Remove the magnetic faceplate/bezel (**A** in FIG. 57) from the main NXD unit (**B** in FIG. 57) by gripping the faceplate and pulling with gentle outward force.
2. Verify the incoming RJ-45, Ethernet, and any other audio/video cables have been properly threaded through the wiring knockouts on the left of the conduit box. Leave enough slack in the wiring to accommodate any re-positioning of the panel.
3. Connect all data and power wiring connectors to their corresponding locations along the side of the (un-powered) NXD touch panel.
   - Verify the terminal end of the power cable is not connected to a power supply before plugging in the 2-pin power connector.
   - The USB connectors can be from either a USB extension cable, or a wireless USB RF transmitter.

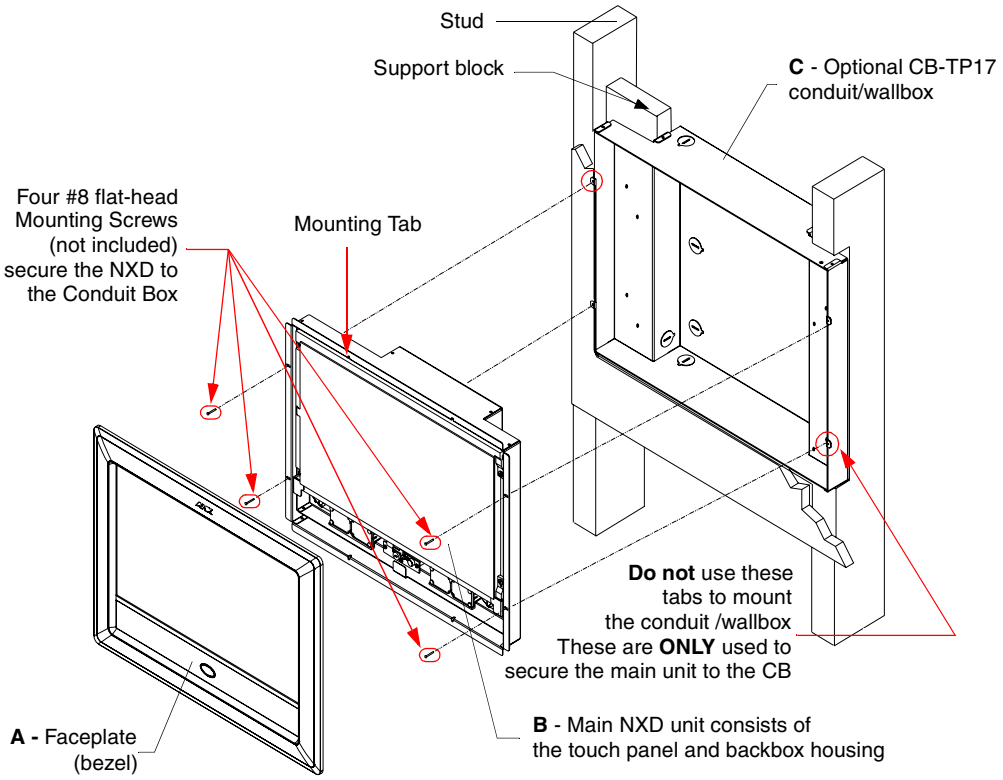

FIG. 57 Wall Mount panel installation configuration of a CB-TP17 in a pre-wall construction

4. Test the incoming wiring by connecting the panel connections to their terminal locations and applying power. Verify the panel is receiving power and functioning properly to prevent repetition of the installation.
5. Disconnect the terminal end of the power cable from the connected power supply.

NOTE

Don't disconnect the connectors from the touch panel. The unit must be installed with the attached connectors before being inserted into the conduit box.

6. Carefully slide the main NXD unit (**B** in FIG. 57) into the conduit box, so the Mounting Tab lies flush against the conduit box (**C** in FIG. 57).
7. Insert and secure four securing #8 flat-head Mounting Screws into their corresponding holes located along the sides of the NXD (FIG. 57). *These #8 screws are not included within the CB Installation Kit and must be provided by the installer.*
8. Place the magnetic faceplate (**A** in FIG. 57) back onto the main NXD unit (**B** in FIG. 57). Make sure to align the Microphone, Light, and PIR Motion sensor locations to their respective openings on the front bezel/faceplate.
9. Reconnect the terminal RJ-45, Ethernet, and any optional audio/video wiring to their respective locations (*outside the conduit box*) on either the NXA-AVB/RGB, Ethernet port, or NetLinx Master.
10. Reconnect the terminal power connector on the 12 VDC-compliant power supply and apply power.

Installing the NXD-1700VG into drywall using Expansion Clips

Expansion clips are mounted through the four oval holes located along the rim of the NXD-1700VG. As the screw is tightened, the clip bends toward the insertion hole and into the wall. This bending creates a "grip" on the wall by either pressing onto the wall or by securing the drywall between the housing and the drywall clip.

The most important thing to remember when mounting the NXD-1700VG Wall Mount is that the outer frame (Mounting Ridge) must be mounted flush against the mounting surface.

Most beams have a distance of about 14" to 16". This is too narrow to accommodate the 17.03" (43.26 cm) wide outer housing (back box) of the NXD-1700VG.

1. Determine which stud beam configuration to use:

   - **Pre-wall** framing is done prior to the drywall installation (local framing instructions vary based on location and building codes). FIG. 58 shows show to mount and position the main NXD unit into a pre-wall environment (for use with drywall clips).

     There is no notching of a beam in this method. The center vertical beam is cut out, attached, and secured to two horizontal beams, then further secured into place by an another offset vertical beam that "frames" the insertion area. This framing method provides a space of ~1.20 inches (30.63 mm) above and below the NXD unit to provide the drywall clips with room to secure themselves against the drywall.

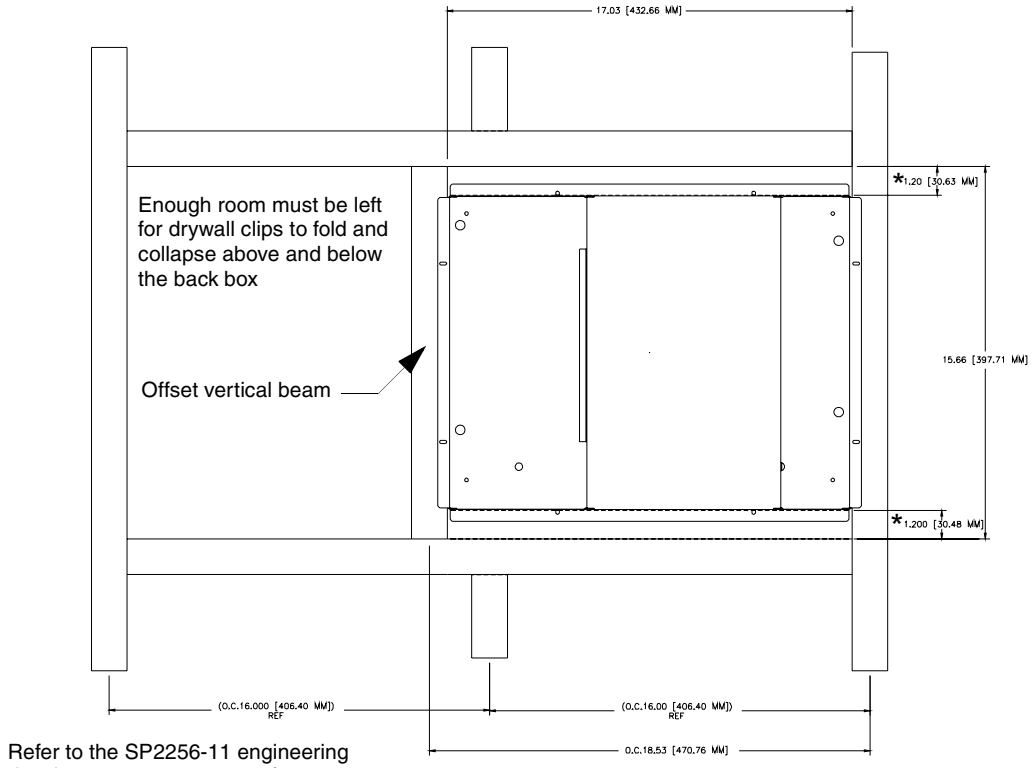

Refer to the SP2256-11 engineering drawing on **www.amx.com** for more detailed framing information

FIG. 58 NXD-1700VG framing installation overview

   - **With an existing wall in place**, continue with steps 3 and 4 to notch one or both selected beams. There is **no horizontal support beam "framing" in this method**.
     Take into account the width of the cutting blade and the thickness of the drywall surface when making the cut into the drywall.

WARNING

INSTALLER: LEAVE A GAP BETWEEN THE SURFACE OF THE STUD AND THE BACK BOX MOUNTING RIDGE TO ACCOMMODATE THE DRYWALL/ SHEETROCK. *This gap allows the installation of the drywall/sheetrock after the back box has been mounted onto the beams.*

2. Locate the edges of the two studs used in this installation. *The location of the NXD is site dependant and could involve notching more than one beam.*

NOTE

In this sample installation, the left beam is notched and the back box rests against the right beam.

3. Remove any screws/nails from the drywall, along the notched beam, before beginning the cutout process.

4. Cut out the surface for the NXD-1700VG Wall Mount using the dimensions shown in FIG. 59. Be sure to cut out the four notches along the top and bottom areas to accommodate the four drywall expansion clips (provided).

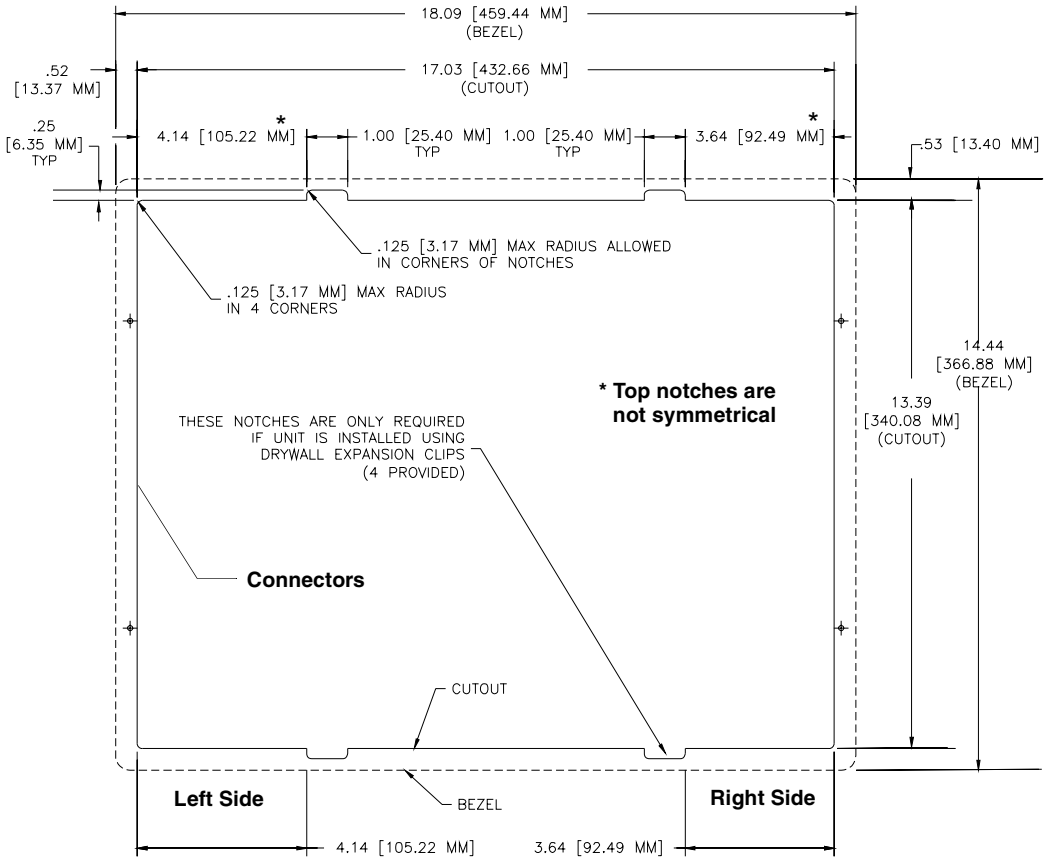

FIG. 59 NXD-1700VG Wall Mount panel dimensions using expansion clips

5. Remove the magnetic faceplate/bezel (**A** in FIG. 60) from the main NXD unit (**B** in FIG. 60) by gripping the faceplate and pulling with gentle outward force.

6. Follow the procedures outlined within Steps 1 - 5 on page 42 thru page 43 to carefully reinstall the LCD panel back into the back box housing.

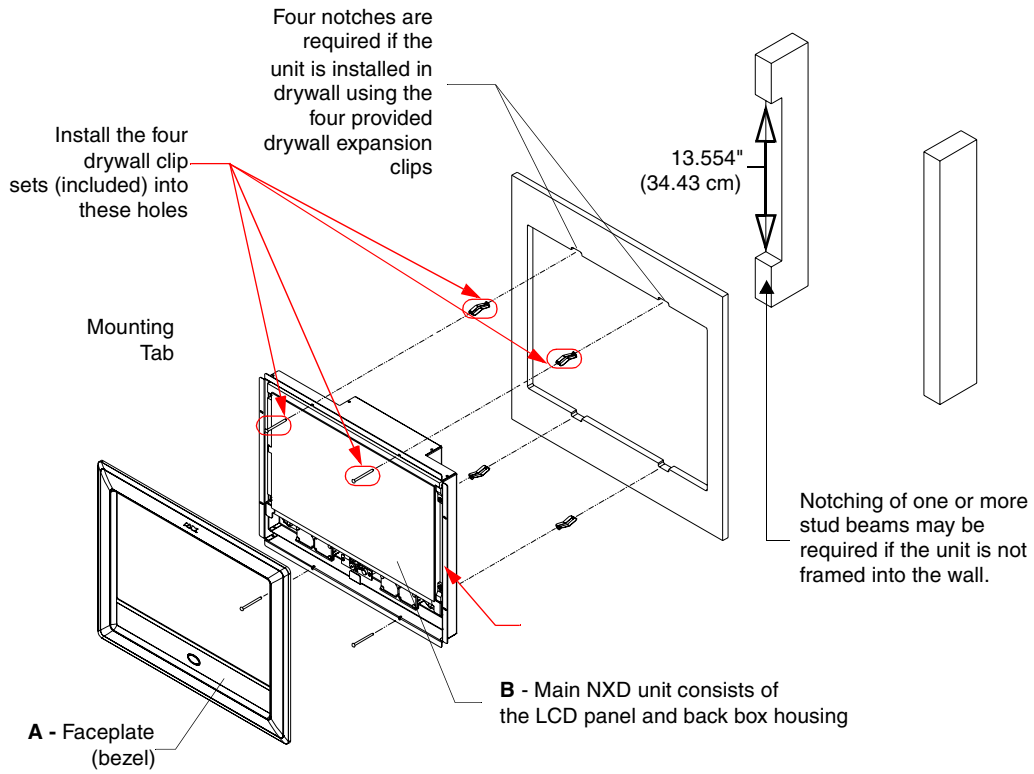

FIG. 60 Wall Mount panel (NXD) installation using expansion clips

7. Carefully lay the separated LCD (from the main unit) onto a soft cloth resting on a level surface to prevent scratching of the LCD.
8. Insert the back box into the cutout to check for fit. Make any adjustments to the dimension of the cutout to accommodate the back box.
9. Cutout the notched beam (FIG. 59) using a height of 13.554" (34.43 cm) and a depth ***using the following guideline***. *This notched beam is located on the side of the NXD unit furthest away from the connectors.*
   - Calculate the distance from the edge of the mounting ridge (FIG. 59) to the rear point (on the box) where the beam touches the back box.
     Our example uses **1 3/8" (inches)** (*on the deepest point of the rear back box*).
   - Calculate the thickness of the drywall/sheetrock. Our example uses **5/8" (inches)**.
   - The depth of the notch: 1 3/8" **minus** 5/8" = **6/8" (inches)**. This value reflects the cutout depth necessary for the mounting ridge on the back box to be flush against the surface.

WARNING

The determining factor in the depth of the cut into the beam is the thickness of the drywall. ***The MOUNTING TAB MUST BE FLUSH*** *against the drywall and therefore, the depth of the notch depends on that thickness.*

10. Thread the incoming RJ-45, Ethernet, and any other audio/video wiring (from their terminal locations) through the cutout opening. Refer to the *Wiring Guidelines for the 1700VG Panels* section on page 87 for pinout descriptions. *Leave enough slack in the wiring to accommodate any re-positioning of the panel.*

11. Connect all data and power wiring connectors to their corresponding locations along the side of the (un-powered) NXD touch panel.
    - Verify the terminal end of the power cable is not connected to a power supply before plugging in the 2-pin power connector.
    - The USB connectors can be from either a USB extension cable, or a wireless USB RF transmitter.
12. Test the incoming wiring by attaching the panel connections to their terminal locations and applying power. Verify the panel is receiving power and functioning properly to prevent repetition of the installation.
13. Disconnect the terminal end of the power cable from the connected power supply.

NOTE

Don't disconnect the connectors from the touch panel. The unit must be installed with the attached connectors before being inserted into the drywall.

14. Follow the procedures outlined within Steps 1 - 5 on page 42 thru page 43 to carefully reinstall the LCD panel back into the back box housing.
15. Install the four sets of drywall screws and expansion clips into the four oval notch locations along the top/bottom edges of the main unit (FIG. 60). Make sure the top drywall clip grooves face upwards and the bottom clip grooves face downwards *(so they extend away from the Main unit)*.
16. **Carefully insert the main unit (with expansion clips) into the cutout until the Mounting Tabs on the NXD unit lie flush against the wall** (FIG. 60). Make sure to have the right side of the box resting against the non-notched beam (on the right) and the connector-side of the unit pressed into the notched beam (on the left).

WARNING

Replacement drywall clip sets must be ordered from AMX.

17. Tighten the drywall clip sets (screws and clips) until the Mounting Tabs are securely fastened and flush against the wall.
18. Place the magnetic faceplate (**A** in FIG. 60) back onto the main NXD unit. Make sure to align the Microphone, Light, and PIR Motion sensor locations to their respective openings on the front bezel/faceplate.
19. Reconnect the terminal RJ-45, Ethernet, and any optional audio/video wiring to their respective terminal locations on either the NXA-AVB/RGB Breakout Box, Ethernet port, or NetLinx Master.
20. Reconnect the terminal power connector on the 12 VDC-compliant power supply and apply power.

Installing the NXD-1700VG into a Flat Surface using #6 screws

Mounting screws (#6, not included) are secured through two sets of circular holes located at the left and right sides of the NXD-1700VG. **The most important thing to remember when mounting the NXD Wall Mount is that the outer frame (Mounting Tabs) must be installed flush against the mounting surface.**

Most beams have a distance of about 14" to 16". This is too narrow to accommodate the 17.03" (43.26 cm) wide outer housing (back box) of the NXD-1700VG.

WARNING

INSTALLER: LEAVE A GAP BETWEEN THE SURFACE OF THE STUD AND THE BACK BOX MOUNTING RIDGE TO ACCOMMODATE THE DRYWALL/ SHEETROCK. *This gap allows the installation of the drywall/sheetrock after the back box has been mounted onto the beams.*

1. Determine which stud beam configuration to use:
   - **Pre-wall** framing is done prior to the drywall installation (local framing instructions vary based on location and building codes). Mount the main NXD unit into a pre-wall environment by fitting the right side of the box against a beam, then notching the stud closest to the connectors (based on FIG. 61 and the depth of the drywall), and using the securing screws to fasten the unit into place after the drywall has been installed. A horizontal beam can be installed (framed) below the back box to provide lower support.
   - **With an existing wall in place**, continue with steps 3 and 4 to notch one or both selected beams. There is **no horizontal support beam "framing" in this method**.
     Take into account the width of the cutting blade and the thickness of the drywall surface when making the cut into the drywall.
2. Locate the edges of the two studs used in this installation. *The location of the NXD is site dependant and could involve notching more than one beam.*

NOTE

In this sample installation, the left beam is notched and the back box rests against the right beam.

3. Remove any screws/nails from the surface, along the notched beam, before beginning the cutout process.
4. Follow the procedures outlined within Steps 1 - 5 on page 42 thru page 43 to carefully reinstall the LCD panel back into the back box housing.
5. Cut out the surface for the Wall Mount using the dimensions shown in FIG. 61.

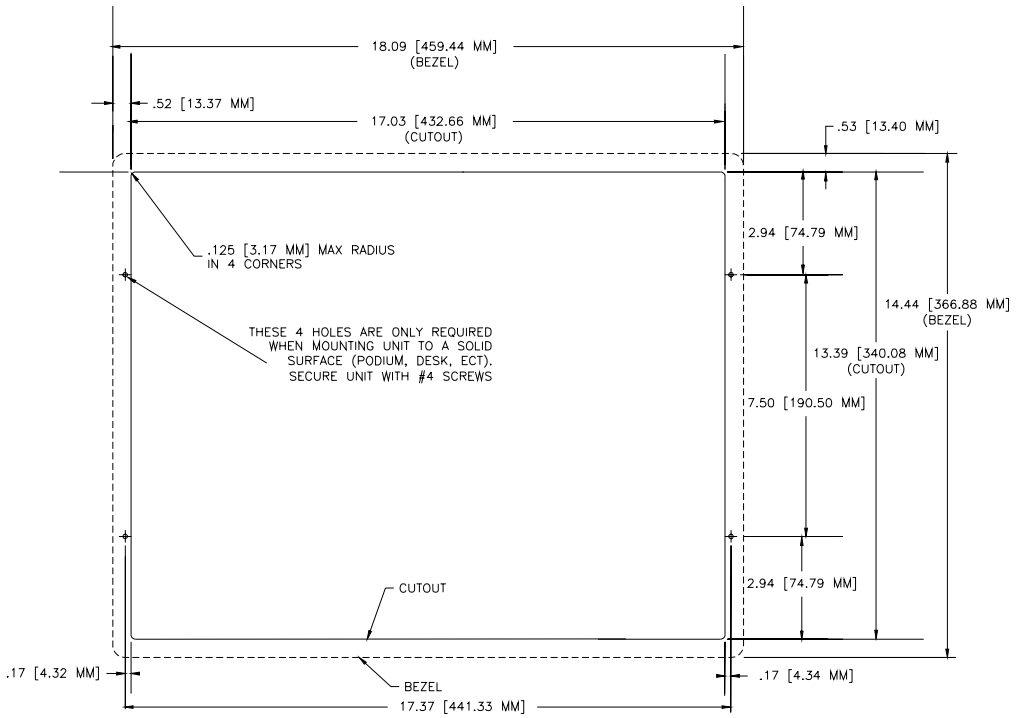

FIG. 61 NXD-1700VG Wall Mount panel dimensions using #4 mounting screws

6. Remove the magnetic faceplate/bezel (**A** in FIG. 62) from the main NXD unit (**B** in FIG. 62) by gripping the faceplate and pulling with gentle outward force.

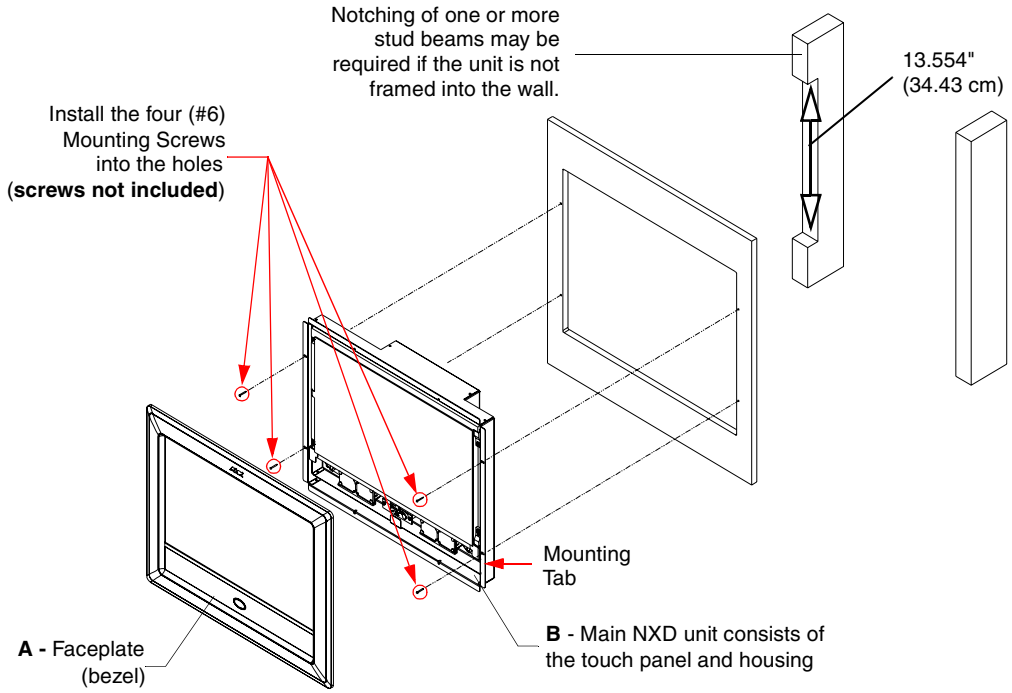

FIG. 62 Wall Mount panel (NXD) installation using screws

7. Carefully lay the separated LCD (from the main unit) onto a soft cloth resting on a level surface. This soft cloth prevents scratching during the rest of the installation procedure.
8. Insert the back box into the surface cutout to check for fit. Make any adjustments to the dimension of the cutout to accommodate the back box.
9. Cutout the notched beam (FIG. 62 on page 84) using a height of 13.554" (34.43 cm) and a depth ***using the following guideline***. *This notched beam is located on the side of the NXD unit furthest away from the connectors.*
   - Calculate the distance from the edge of the mounting ridge (FIG. 62) to the rear point (on the box) where the beam touches the back box.
     Our example uses **1 3/8" (inches)** (*on the deepest point of the rear back box*).
   - Calculate the thickness of the surface. Our example uses **5/8" (inches)**.
   - The depth of the notch: 1 3/8" **minus** 5/8" = **6/8" (inches)**. This value reflects the cutout depth necessary for the mounting ridge on the back box to be flush against the surface.

WARNING

The determining factor in the depth of the cut into the beam is the thickness of the surface. ***The MOUNTING TAB MUST BE FLUSH*** *against the surface and therefore, the depth of the notch depends on that thickness.*

10. Thread the incoming RJ-45, Ethernet, and any other audio/video wiring (from their terminal locations) through the cutout opening. Refer to the *Wiring Guidelines for the 1700VG Panels* section on page 87 for pinout descriptions. *Leave enough slack in the wiring to accommodate any re-positioning of the panel.*
11. Connect all data and power wiring connectors to their corresponding locations along the side of the (un-powered) NXD touch panel.
    - Verify the terminal end of the power cable is not connected to a power supply before plugging in the 2-pin power connector.
    - The USB connectors can be from either a USB extension cable, or a wireless USB RF transmitter.
12. Test the incoming wiring by connecting the panel connections to their terminal locations and applying power. Verify the panel is receiving power and functioning properly before finalizing the installation.
13. Disconnect the terminal end of the power cable from the power supply.

NOTE

Don't disconnect the connectors from the touch panel. The unit must be installed with the attached connectors before being inserted into the solid surface.

14. Follow the procedures outlined within Steps 1 - 5 on page 42 thru page 43 to carefully reinstall the LCD panel back into the back box housing.
15. Carefully slide the main unit into the cutout until the Mounting Tabs of the NXD-1700VG unit lie flush against the wall.
16. Insert and secure the four #6 screws into their corresponding holes located along the sides of the NXD-1700VG (using a grounded Phillips-head screwdriver) until the unit is secure and flush against the wall.
17. Place the magnetic faceplate (**A** in FIG. 62) back onto the main NXD unit. Make sure to align the Microphone, Light, and PIR Motion sensor locations to their respective openings on the front bezel/faceplate.

18. Reconnect the terminal RJ-45, Ethernet, and any optional audio/video wiring to their respective terminal locations on either the NXA-AVB/RGB Breakout Box, Ethernet port, or NetLinx Master.
19. Reconnect the terminal power connector on the 12 VDC-compliant power supply and apply power.

Installing an NXD into an (optional) Rack Mount Kit (NXA-RK17)

1. Remove the magnetic faceplate/bezel from the main NXD unit by gripping the faceplate and pulling with gentle outward force.
2. Thread the incoming RJ-45, Ethernet, and any optional audio/video wiring (from their terminal locations) through the opening in the equipment rack. Refer to the *Wiring Guidelines for the 1700VG Panels* section on page 87 for pinout descriptions. Leave enough slack to accommodate any re-positioning of the panel.
3. Connect all data and power wiring connectors to their corresponding locations along the side of the (un-powered) NXD touch panel.
   - Verify the terminal end of the power cable is not connected to a power supply before plugging in the 2-pin power connector.
4. Test the incoming wiring by connecting the panel connections to their terminal locations and applying power. Verify the panel is receiving power and functioning properly to prevent repetition of the installation.
5. Disconnect the terminal end of the power cable from the connected power supply.

NOTE

Don't disconnect the connectors from the touch panel. The unit must be installed with the attached connectors before being inserted into the equipment rack.

6. Insert the main 17-inch Modero unit into the NXA-RK17 (FIG. 63).

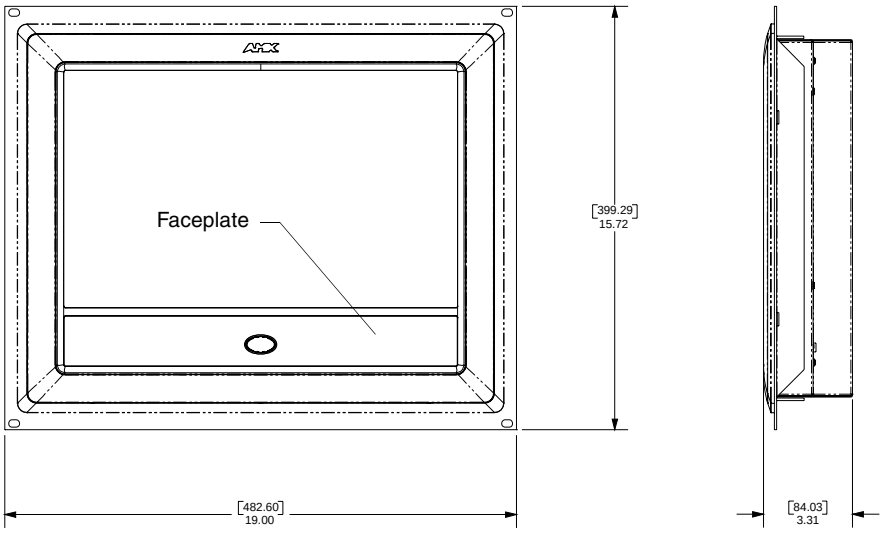

FIG. 63 NXD-1700VG Wall Mount panel installed into an NXA-RK17 Rack Mount Kit

7. Secure the panel to the NXA-RK17 mount frame by first inserting and then tightening the four #4-40 screws.
8. Insert the NXA-RK17 (with connected NXD unit) into the equipment rack, making sure to align the screw holes along the sides of the NXA-RK17 with the holes in the equipment rack.

9. Use a grounded Phillips-head screwdriver to secure the NXA-RK17 to the equipment rack using #10-32 screws (not included).
10. Place the magnetic faceplate back onto the main NXD unit by gripping the faceplate and placing it on the housing with gentle force. *Make sure to align the Microphone, Light, and PIR Motion sensor locations to their respective openings on the front bezel/faceplate.*
11. Reconnect the terminal RJ-45, Ethernet, and any optional audio/video wiring to their respective terminal locations on either the NXA-AVB/RGB Breakout Box, Ethernet port, or NetLinx Master.
12. Reconnect the terminal power connector on the 12 VDC-compliant power supply and apply power.

Wiring Guidelines for the 1700VG Panels

1700VG panels use a 12 VDC-compliant power supply to provide power to the panel via the 2-pin 3.5 mm mini-Phoenix PWR connector. Use the previously referenced power requirements to determine the power draw.

The incoming PWR and GND wires from the power supply must be connected to the corresponding locations within the PWR connector.

CAUTION

These units should only have one source of incoming power. Using more than one source of power to the touch panel can result in damage to the internal components and a possible burn out.
*Apply power to the panels **only after** installation is complete.*

Preparing captive wires

You will need a wire stripper and flat-blade screwdriver to prepare and connect the captive wires.

WARNING

Never pre-tin wires for compression-type connections.

1. Strip 0.25 inch (6.35 mm) of insulation off all wires.
2. Insert each wire into the appropriate opening on the connector (according to the wiring diagrams and connector types described in this section).
3. Tighten the screws to secure the wire in the connector. *Do not tighten the screws excessively; doing so may strip the threads and damage the connector.*

Wiring a power connection

To use the 2-pin 3.5 mm mini-Phoenix connector for use with a 12 VDC-compliant power supply, the incoming PWR and GND wires from the external source must be connected to their corresponding locations on the connector (FIG. 64).

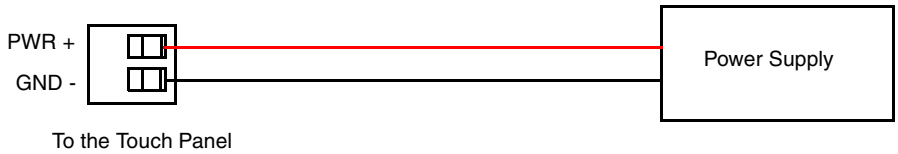

FIG. 64 NetLinx power connector wiring diagram

1. Insert the PWR and GND wires on the terminal end of the 2-pin 3.5 mm mini-Phoenix cable. ***Match the wiring locations of the +/- on both the power supply and the terminal connector.***
2. Tighten the clamp to secure the two wires. *Do not tighten the screws excessively; doing so may strip the threads and damage the connector.*

3. Verify the connection of the 2-pin 3.5 mm mini-Phoenix to the power supply.

Audio/Video Port: Connections and Wiring

The following table shows the signal and pinout/pairing information used on the RJ-45 Audio and Video connections.

Audio/Video RJ-45 Pinout Information

Pin	Wire Color	Function	Polarity
1	Orange/White	Right Audio In	+
2	Orange	Right Audio In	-
3	Green/White	Video In	-
4	Blue	Mic Out	-
5	White/Blue	Mic Out	+
6	Green	Video In	+
7	White/Brown	Left Audio In	+
8	Brown	Left Audio In	-

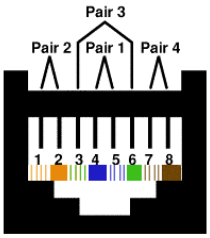

TIA 568B

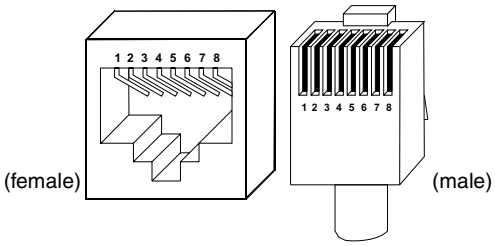

RJ-45 connector - pin configurations

Refer to the *Installing CAT5 Suppression Ferrites* section on page 30 for detailed information on how to install the necessary number of CAT5 Suppression Ferrites on the Black A/V RJ-45 cable connected to the panel.

Ethernet/RJ-45 Port: Connections and Wiring

FIG. 65 describes the blink activity for the Ethernet 10/100 Base-T RJ-45 connector and cable. The Ethernet cable is connected to the rear of Table Top and side of the Wall Mount panels.

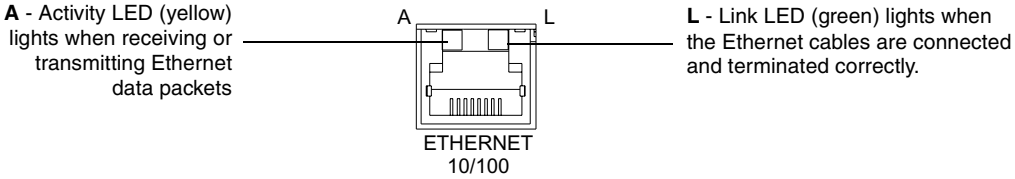

FIG. 65 Ethernet connector (showing communication and connection LEDs)

The following table lists the pinouts, signals, and pairing associated with the Ethernet connector.

Ethernet RJ-45 Pinouts and Signals				
Pin	Signals	Connections	Pairing	Color
1	TX +	1 --------- 1	1 --------- 2	Orange-White
2	TX -	2 --------- 2		Orange
3	RX +	3 --------- 3	3 --------- 6	Green-White
4	no connection	4 --------- 4		Blue
5	no connection	5 --------- 5		Blue-White
6	RX -	6 --------- 6		Green
7	no connection	7 --------- 7		Brown-White
8	no connection	8 --------- 8		Brown

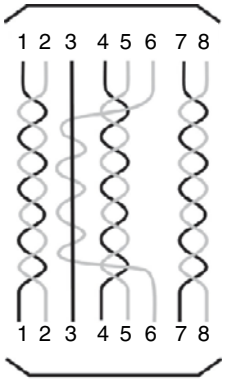

FIG. 66 diagrams the RJ-45 pinouts and signals for the Ethernet RJ-45 connector and cable.

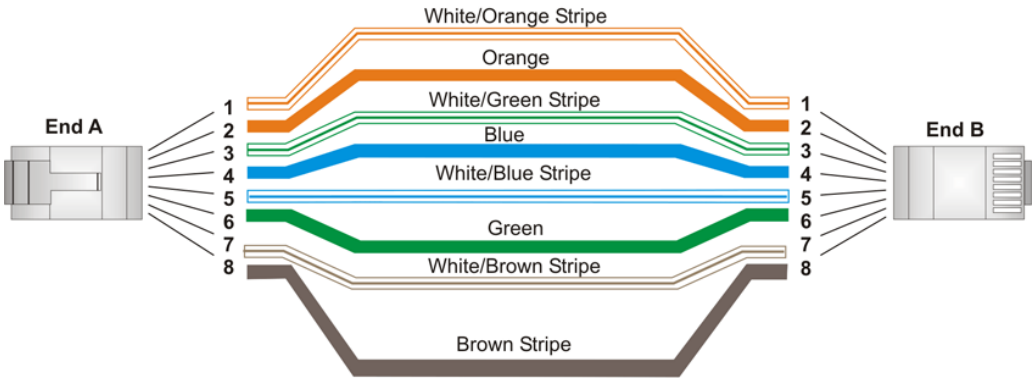

FIG. 66 RJ-45 wiring diagram

Panel Calibration

Overview

This section outlines the steps for calibrating the touch panel. *It is recommended that you calibrate the panel before its initial use and after completing a firmware download.*

Modero panels are factory setup with specific demo touch panel pages. The first splash screen that appears indicates the panel is receiving power, beginning to load firmware, and preparing to display the default touch panel pages. When the panel is ready, the AMX Splash Screen is replaced by the Initial Panel Page (FIG. 67).

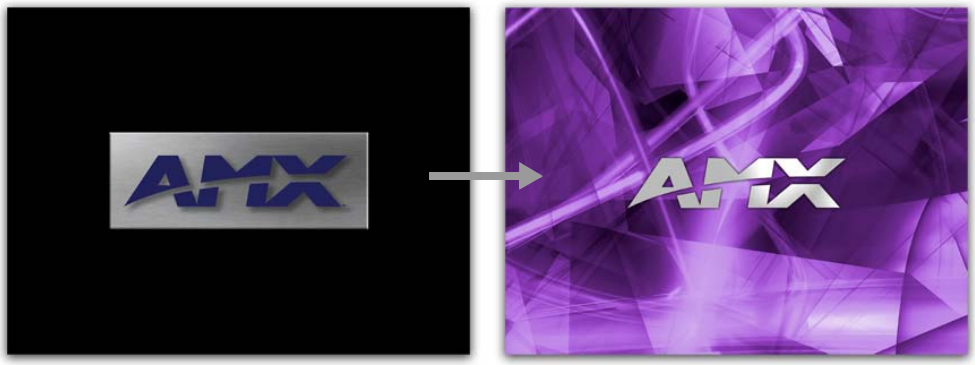

AMX Splash Screen
(appears during power-up)

Initial Panel Page
(AMX Logo Page)

FIG. 67 AMX splash screen and Initial Panel Page

Calibrating the Modero Panel

1. Press and hold the grey Front Setup Access button (FIG. 68) for **6 seconds** (passing-over the Setup page) to access the Calibration setup page (FIG. 69). ***The panel should first be calibrated properly.***

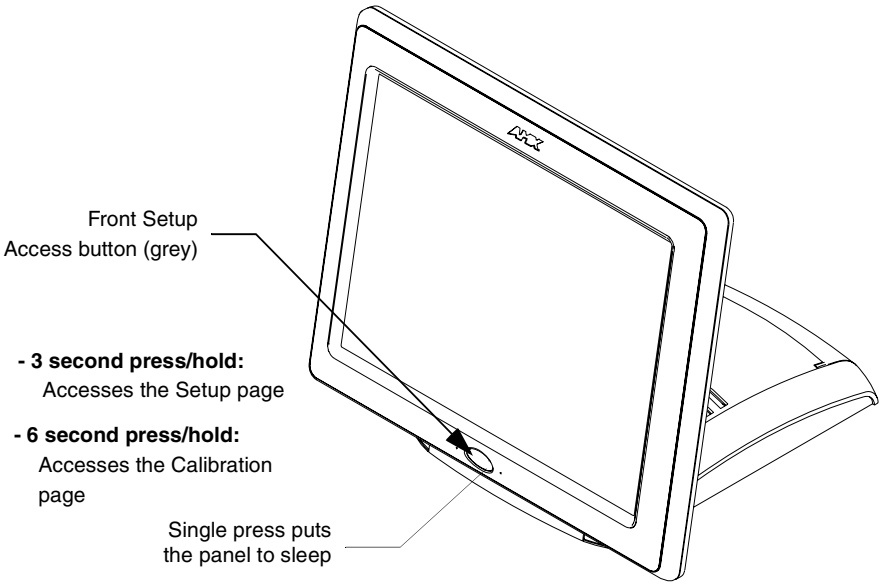

FIG. 68 Location of grey Front Setup Access button

2. Press the crosshairs (on the Calibration page) to set the calibration points on the LCD (FIG. 69).

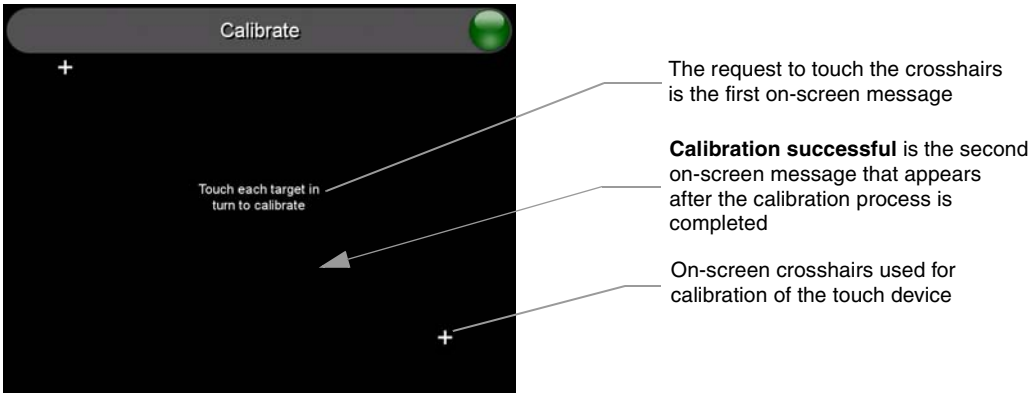

FIG. 69 Touch Panel Calibration Screens

3. After the "***Calibration Successful.***" message appears, press anywhere on the screen to continue and return to the Setup page.

NOTE

If the calibration was improperly set and you cannot return to the Calibration page (through the panel's firmware); *you can access this firmware page via G4 WebControl where you can navigate to the Protected Setup page and press the Calibrate button through your VNC window.*
This action causes the panel to go to the Calibration page seen above, where you can physically recalibrate the actual touch panel again using the above procedures.

Testing your Calibration

1. Press and hold down the on-screen **Calibration** button for 6 seconds to enter the Calibration Test page (FIG. 70).

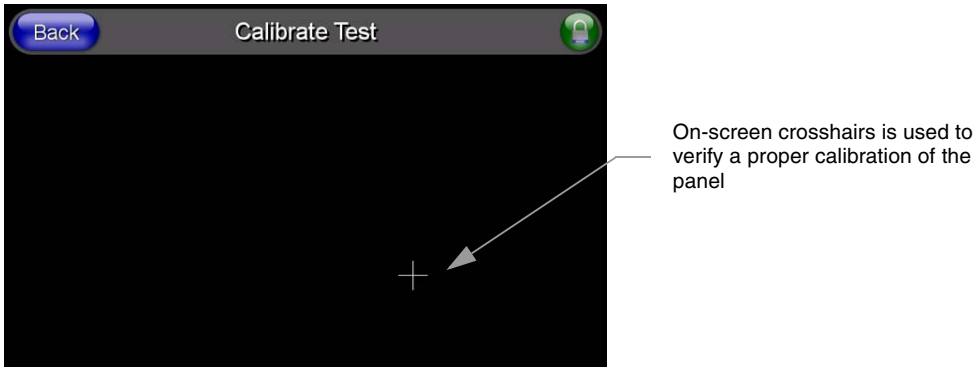

FIG. 70 Calibration Test page

2. Press anywhere on this page to confirm the on-screen crosshairs match your touch points.
3. If the crosshairs do not appear directly below your LCD touch points, press the **Back** button and recalibrate the panel using the above steps.
4. Exit this Calibration Test page by pressing the **Back** button to return to the Protected Setup page.

Configuring Communication

Overview

Communication between the Modero panel and the Master is done using either **USB** or **ETHERNET** (**DHCP or Static IP**). Ethernet communication can be achieved through either a direct connection (Ethernet) or through the use of the optional NXA-PCI80211G wireless interface card.

NOTE

USB input devices must be plugged into the rear or side USB connectors before the G4 panel is powered-up. The panel will not detect a USB connection of this type until after the unit cycles power.

WARNING

Before commencing, verify you are using the latest NetLinx Master and Modero panel firmware. Verify you are using the latest versions of AMX's NetLinx Studio and TPDesign4 programs.

Modero Setup and System Connection

1. Press the grey Front Setup Access button for **3 seconds** to open the Setup page (FIG. 71).

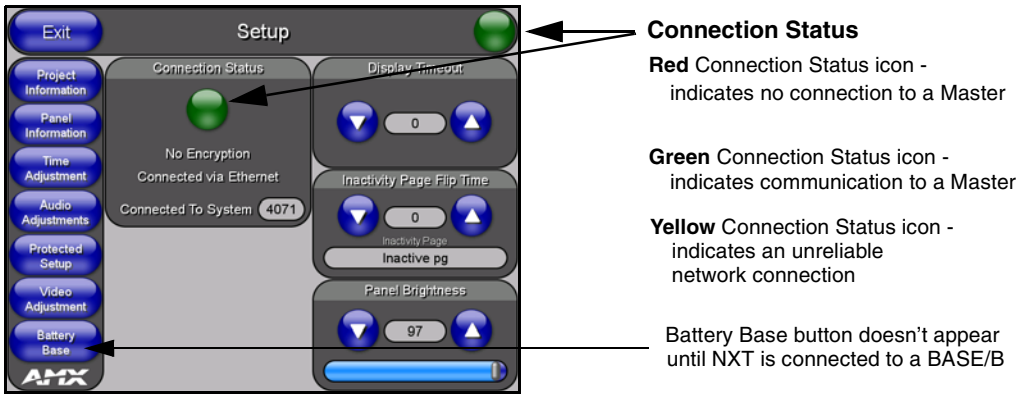

FIG. 71 Setup page

2. Press the **Protected Setup** button (located on the lower-left of the panel page) to open the Protected Setup page and display an on-screen keypad.
3. Enter ***1988*** into the Keypad's password field and press **Done** when finished.

NOTE

Clearing Password #5, from the initial Password Setup page, removes the need for you to enter the default password before accessing the Protected Setup page.

4. Press the red *Device Number* field to open the Device Number keypad (FIG. 72).
5. Enter a **Device Number** value for the panel into the Device Number Keypad**.**
   The default value is 10001 and the range is from 1 - 32000.

NOTE

When using multiple panels within a NetLinx System, remember to assign unique Device Number values to each panel so that all assigned panels appear in the System listing for the target Master.

6. Press **Done** to close the keypad, assign the number, and return to the Protected Setup page.

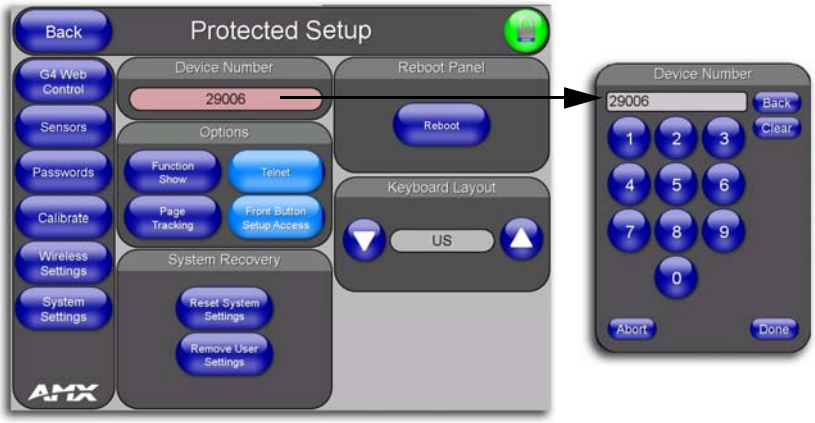

FIG. 72 Protected Setup page

7. Press the on-screen **Reboot** button to restart the panel and incorporate any changes.

NOTE

Before continuing, open NetLinx Studio. This program assists in developing a System Number, Master IP/URL, and Master Port number. Refer to your NetLinx Master's instruction manuals for more information.

8. Obtain the System Number and Master IP Address from NetLinx Studio. This information must be specific for the system used with the configured Modero panel.
9. Press the grey Front Setup Access button for **3 seconds** to open the Setup page.
10. Press the **Protected Setup** button (located on the lower-left of the panel page) to open the Protected Setup page.
11. Press the **System Settings** button (located on the Protected Setup page) to open the System Settings page (FIG. 73) and begin configuring the communication settings on the panel to match those of the target Master.

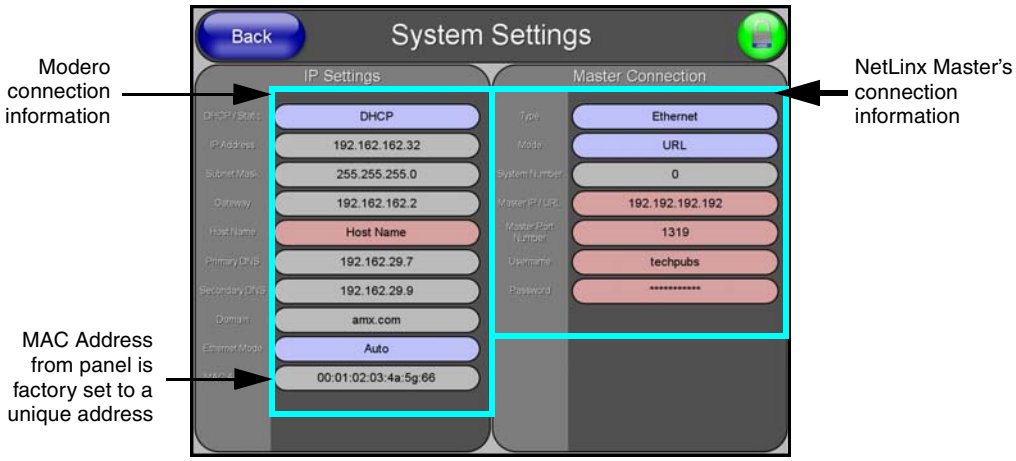

FIG. 73 System Settings page

NOTE

*There are 2 possible Master Connection Types available: **USB** or **Ethernet**.*
*A USB connection type is a **direct connection** from the panel's mini-USB port to a corresponding USB port on the PC (acting as a Virtual Master).*
An Ethernet connection type involves indirect communication from the panel to a Master via an Ethernet connection to the network.

WARNING

It is recommended that firmware KIT files only be transferred over a direct connection and only when the panel is connected to a power supply. If battery power or wireless connection fails during a firmware upgrade, the panel flash file system may become corrupted.

NOTE

*The mini-USB connector **MUST** be plugged into an already active panel before the PC can recognize the connection and assign an appropriate USB driver. This driver is part of the latest TPDesign4 software application installation.*

Configuring and Using USB with a Virtual Master

NetLinx Studio can be setup to run a Virtual Master where the PC acts as the Master by supplying its own IP Address for communication to the panel. The PC is first equipped with the USB driver, the panel is then configured for USB communication, and then Studio is configured to act as the Master.

For a personal computer to establish a connection to a Modero panel via USB, the target computer must have the appropriate AMX USB driver installed. This installation is bundled into the latest TPDesign4 software setup process or can be downloaded independently from the main Application Files page on **www.amx.com**.

Step 1: Setting up the USB Driver on the PC

1. If you do not currently have the latest version of TPDesign4, navigate to **www.amx.com > Tech Center > Downloadable Files > Application Files > NetLinx Design Tools** section of the website and locate the AMX USB Driver executable (**AMX USBLAN Setup exe**).
2. Download this executable file to a known location on your computer.
3. Launch the file by double-clicking on it and follow the on-screen prompts to complete your installation. ***Note that even if you have loaded the latest AMX Studio or TPD4 software, you will still need to download and install this file if you are working with either the 1200V-Series or VG-Series of panels.***
4. Choose the default language, agree to the Licensing information, and choose the location for the file installations (**C:\Program Files\AMX\USBLAN**).
5. From within the Choose Components dialog, select the features you wish to install. The **Driver** option is selected by default and is the only item required.
6. Click the **Install** button to continue with the installation.
7. Once the application begins the installation of the corresponding USB driver files, it may encounter cases where previous versions of these files already exist. This can occur if you have previously installed release versions of NetLinx Studio and TPDesign4.
   - If you are prompted to replace the **AXBLAN.INF** file, select **YES**.
   - If you are prompted to replace the **Checked driver file**, select **NO**.
   - If you are prompted to replace the **AXBLAN.SYS** and **AXFILT.SYS** files, select **Yes**.
8. Continue the setup process by following these OS-related processes:
   - For machines running Windows 2000 simply click the **Next** button when the installation is complete. *Creating a restore point is not an available option in 2000.*

- For Windows XP machines the setup program asks if you would like to create a restore point. It is always a good idea to create restore points prior to installing new software.
  Click the **Next** button when done.

9. At the end of the installation, press the **Finish** button.

Step 2: Confirming the Installation of the USB Driver on the PC

The first time each AMX touch panel is connected to the PC it is detected as a new hardware device and the USBLAN driver becomes associated with it (**panel specific**). Each time thereafter the panel is "recognized" as a unique USBLAN device and the association to the driver is done in the background. When the panel is detected for the **first time** some user intervention is required during the association between panel and driver.

1. After the installation of the USB driver has been completed, confirm the proper installation of the large Type-A USB connector to the PC's USB port, and restart your machine.

NOTE

If the panel is already powered, continue with steps 3.
The panel MUST be powered and configured for USB communication before connecting the mini-USB connector to the panel's Program Port.

2. Connect the terminal end of the 12 VDC-compliant power supply cable to the power connector on the rear/side of the touch panel and then apply power.
3. After the panel powers-up, press and hold the grey Front Setup Access button (**for 3 seconds**) to continue with the setup process and proceed to the Setup page.
4. Select **Protected Setup** > **System Settings** (located on the lower-left) to open the System Settings page (FIG. 74).

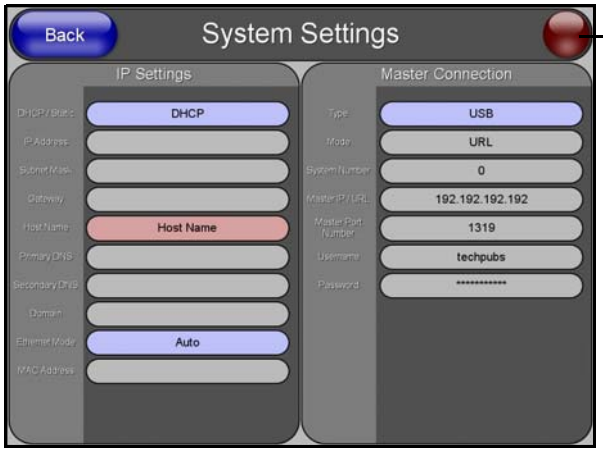

No connection is established until the Virtual Master becomes active within Studio

Yellow Connection Status icon - indicates an unreliable network connection

Red Connection Status icon - indicates no connection to a Master

Green Connection Status icon - indicates communication to a Master

FIG. 74 System Settings page - using a USB Connection Type

5. Toggle the blue *Type* field (***from the Master Connection section***) until the choice cycles to **USB**. Refer to the *System Settings Page* section on page 166 for more information about the fields on this page.

NOTE

***ALL** fields are then greyed-out and read-only, but still display any previous network information.*

6. Press the **Back** button on the touch panel to return to the Protected Setup page.

7. Press the on-screen **Reboot** button to both save any changes and **restart the panel.** *Remember that the panel's connection type must be set to **USB** prior to rebooting the panel and prior to inserting the USB connector.*

8. **ONLY AFTER** the unit displays the first panel page, **THEN** insert the mini-USB connector into the Program Port on the panel. It may take a minute for the panel to detect the new connection and send a signal to the PC (*indicated by a green System Connection icon*). If this is your first time installing the USB driver, a USB driver installation popup window (FIG. 75) then appears on the screen.

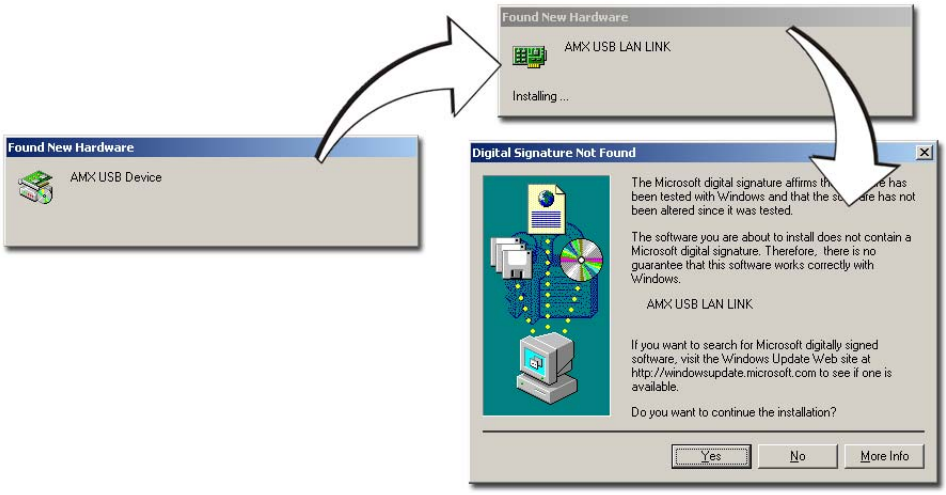

FIG. 75 USB driver installation popup window

- This window notifies you that the panel has been detected by the PC as a USB-compliant device and the PC is installing an appropriate USB driver to establish a proper communication to the panel.
- The driver does not contain a Microsoft® digital signature and Windows® then informs you of such.

9. Click **Yes** when told that a digital signature was not found. This action accepts the installation of the new USB driver. **The panel is now configured to communicate directly with the PC.**
   - This process completes the association between driver and device.
     Each time the same touch panel is connected to the computer the driver is automatically loaded (*using a unique name - example USB LAN LINK #1, #2*).
     Each time a different touch panel is connected to the computer, the previous procedures will need to be repeated.
   - The previous version of the AMX USBLAN driver showed a USB connection icon in the system tray when a panel was connected. **The new version of the driver does not show an icon in the System Tray.**

NOTE

A Virtual NetLinx Master (VNM) is used when the target panel is not connected to a physical NetLinx Master. In this situation, the PC takes on the functions of a Master via a Virtual NetLinx Master. ***This connection is made by either using the PC's Ethernet Address (via TCP/IP using a known PC's IP Address as the Master) or using a direct mini-USB connection to communicate directly to the panel****.*

10. Navigate back to the System Settings page.

Step 3: Confirm and View the current AMX USB device connections

1. Navigate to **Start** > **Settings** >**Control Panel** > and double-click the **System** icon to launch the System Properties dialog.
2. Select the **Hardware** tab and click on the **Device Manager** button to launch the Device Manager dialog.
   - Within the *Device Manager* dialog, the AMX USBLAN device appears under Network Adapters (FIG. 76) and has a unique name such as AMX USB LAN LINK #2. The number changes depending on which recognized panel is currently connected.

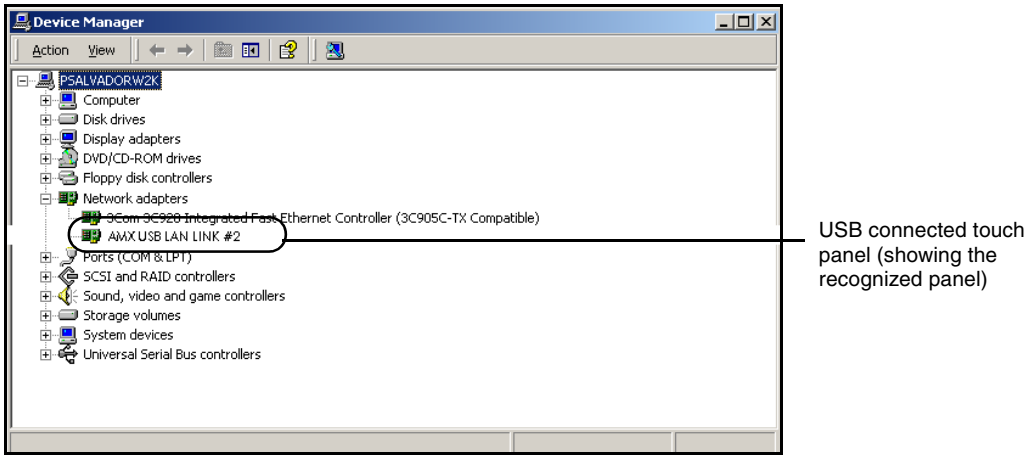

FIG. 76 Device Manager dialog showing USB device

To remove the USB driver association from a previously connected touch panel, you must navigate back to the Device Manager, right-click on the panel's USB driver (example AMX USB LAN LINK #2) and select **Uninstall** from the context menu and then **OK**.

- Once the system completes the removal of the device, the Device Manager window will refresh, and the device will no longer appear.
- The next time this device is connected to the computer it will appear as a new hardware device and will need to be associated again with the driver (refer to *Step 2: Confirming the Installation of the USB Driver on the PC* section on page 96.

Step 4: Using a USB to Configure a Virtual Master (using NetLinx Studio)

NOTE

*When configuring your panel to communicate via USB with a Virtual Master (on your PC), ONLY the **USB** connection option must be selected within the Type field. Since this is a direct connection, the PC's IP Address is not needed.*

Before beginning:

1. Verify the panel has been configured to communicate via USB within the System Settings page and that the USB driver has been properly configured. Refer to the previous section for more information.
2. Launch NetLinx Studio 2.x (default location is **Start** > **Programs** > **AMX Control Disc** > **NetLinx Studio 2** > **NetLinx Studio 2**).
3. Select **Settings** > **Master Communication Settings**, from the Main menu to open the Master Communication Settings dialog (FIG. 77).
4. Click the **Communications Settings** button to open the Communications Settings dialog.

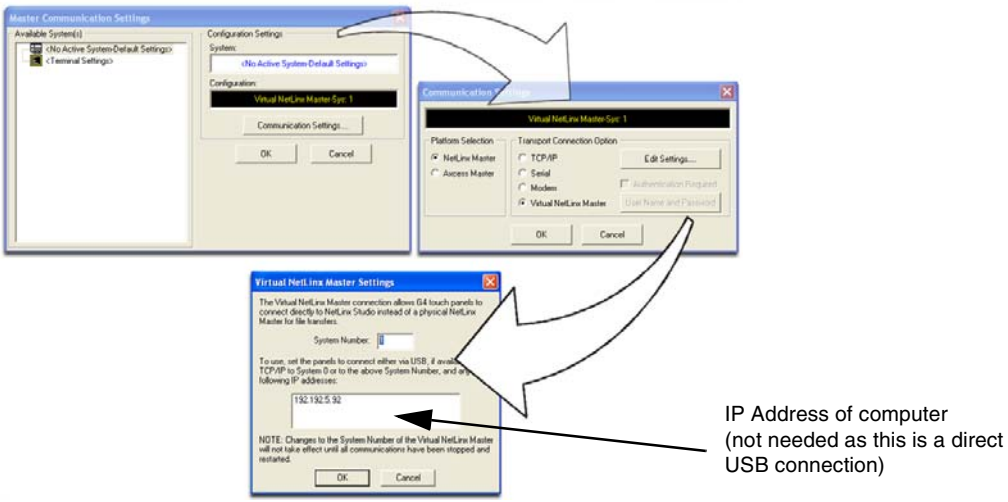

FIG. 77 Assigning Communication Settings for a Virtual Master

5. Click on the **NetLinx Master** radio button (*from the Platform Selection section*) to indicate that you are working as a NetLinx Master.
6. Click on the **Virtual Master** radio box (*from the Transport Connection Option section*) to indicate you are wanting to configure the PC to communicate directly with a panel. Everything else such as the Authentication is greyed-out because you are not going through the Master's UI.
7. Click the **Edit Settings** button (*on the Communications Settings dialog*) to open the Virtual NetLinx *Master Settings* dialog (FIG. 77).
8. From within this dialog enter the System number (default is **1**).
9. Click **OK** three times to close the open dialogs, save your settings, and return to the main NetLinx Studio application.
10. Click the **OnLine Tree** tab in the Workspace window to view the devices on the Virtual System. *The default System value is one*.
11. Right-click on the *Empty Device Tree/System* entry and select **Refresh System** to re-populate the list.
    The panel will not appear as a device below the virtual system number (in the Online Tree tab) until both the system number used in step 7 for the VNM is entered into the Master Connection section of the System Settings page and the panel is restarted.
    - The Connection status turns green after a few seconds to indicate an active USB connection to the PC (Virtual Master). No Lock icon is displayed because this USB connection is not secured (*requiring a username/password*).
    - If a few minutes have gone by and the System Connection icon still does not turn green, repeat the USB connection and Virtual Master setup procedures (outlined in this section). Refreshing the System sends out a request to the panel to respond and completes the communication (*turning the System Connection icon green*).

Step 5: Confirm and View the current AMX USB device connections

Use the CC-USB Type-A to Mini-B 5-wire programming cable (**FG10-5965**) to provide communication between the mini-USB Program port on the touch panel and the PC. This method of communication is used to transfer firmware KIT files and TPD4 touch panel files.

NOTE

A mini-USB connection is only detected after it is installed onto an active panel. Connection to a previously powered panel which then reboots, allows the PC to detect the panel and assign an appropriate USB driver.

1. Verify this direct USB connection (Type-A on the panel to mini-USB on the panel) is configured properly using the steps outlined in the previous two sections.
2. With the panel already configured for USB communication and the Virtual Master setup within NetLinx Studio, its now time to verify the panel is ready to receive files.
3. Click the **OnLine Tree** tab in the Workspace window to view the devices on the Virtual System. *The default System value is one*.
4. Right-click on the System entry (**A** in FIG. 78) and select **Refresh System** to re-populate the list. This causes a refresh of all project systems, establishes a new connection to the Virtual Master, and populates the System list with devices on your particular system.

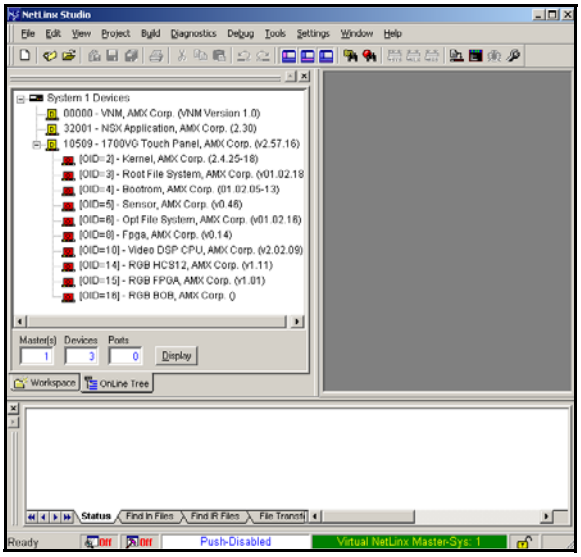

FIG. 78 Using USB for Virtual Master communication

Wireless Settings Page - Wireless Access Overview

IP Routing

The behavior of the wireless routing is largely dependent on the wired network interface. Although the panel can be connected to two networks simultaneously it may only have one gateway. If the wired network was successfully set up and a gateway was obtained; then the default route for all network traffic will be via the wired network. In the event that the wired network was not configured, then the default route for all network traffic will be via the wireless network. The wired network connection always takes priority.

As an example:

- Imagine a panel connected to two networks A & B. **A** is the wired network and **B** is the wireless network. If the Master controller is on either of these networks then it will be reached. However if the Master controller is on a different network, **C**, then determining which network interface (wired or wireless) that will be used is dependent on the gateway.

Hot Swapping

Hot swapping is not an issue on these panels as the card is installed within the unit and cannot be removed without first removing the housing.

In the case of DHCP, there must be a DHCP server accessible before the fields are populated.

NOTE

If the SSID (Network Name) and WEP fields have not previously been configured, the Wireless Settings page will not work until the panel is rebooted.

Ethernet Communication from the panel can be direct (using an Ethernet cable) or indirect (through the optional NXA-PCI80211G AMX Wireless Card (**FG2255-04**) communicating to a Wireless Access Point such as the NXA-WAP200G). In determining the Ethernet method of communication, the panel will always default first to the direct Ethernet communication. If no direct connection is detected, the panel will first check to see if there is an installed wireless interface card and then communicate to the WAP using the Wireless Settings assigned within the Wireless Settings page. The WAP communication parameters must match those of the pre-installed wireless interface card installed within the panel.

- **Wireless Access Points** are the cornerstone of any wireless network. A Wireless Access Point acts as a bridge between a wired and wireless network. It aggregates the traffic from all the wireless clients and forwards it down the network to the switch or router. One Wireless Access Point may be all you need. However, you could need more Wireless Access Points depending on either how large your installation is, how it is laid out, and how it is constructed.
- **Wireless Equivalent Privacy** (**WEP**) Security is a method by which WLANs protect wireless data streams. A data stream encrypted with WEP can still be intercepted or eavesdropped upon, but the encryption makes the data unintelligible to the interloper. The strength of WEP is measured by the length of the key used to encrypt the data. The longer the key, the harder it is to crack.
  802.11b implementations provided 40-bit and 104-bit WEP keys. This is known respectively as 64-bit and 128-bit WEP encryption. 64-bit is generally not regarded as adequate security protection. Both key lengths are supported by the Modero product line. Whichever level of WEP you use, it's crucial to use identical settings (CASE SENSITIVE)--the key length, and the key itself-- on all devices. Only devices with common WEP settings will be able to communicate. Similarly, if one device has WEP enabled and another doesn't, they won't be able to talk to each other.

Although the calculations required to encrypt data with WEP can impact the performance of your wireless network, it's generally seen only when running benchmarks, and not large enough to be noticeable in the course of normal network usage.

Configuring a Wireless Connection

When working with a wireless card, the first step is to configure wireless communication parameters within the Wireless Settings page. This page only configures the card to communicate to a target WAP (such as the NXA-WAP200G), **it is still necessary to tell the panel which Master it should be communicating with**. This "pointing to a Master" is done via the System Settings page where you configure the IP Address, System Number and Username/Password information assigned to the target Master.

Step 1: Configuring the Panel's Wireless IP Settings

The first step to successfully setting up your wireless card is to configure the IP Settings section on the Wireless Settings page. The section configures the communication parameters from the Modero panel to the web.

Wireless communication using a DHCP Address

1. Press the **Protected Setup** button (located on the lower-left of the panel page) to open the Protected Setup page and display an on-screen keypad.
2. Enter ***1988*** into the Keypad's password field and press **Done** when finished.
3. Press the **Wireless Settings** button (located on the lower-left) to open the Wireless Settings page. Wireless communication is set within the IP Settings section of this page (FIG. 79).
4. Toggle the *DHCP/Static* field (***from the IP Settings section***) until the choice cycles to **DHCP**. *This action causes all fields in the IP Settings section (other than Host Name) to be greyed-out.*

NOTE

DHCP will register the unique MAC Address (factory assigned) on the panel and once the communication setup process is complete, assign IP Address, Subnet Mask, and Gateway values being communicated to the panel.

5. Press the optional *Host Name* field to open a Keyboard and enter the Host Name information.

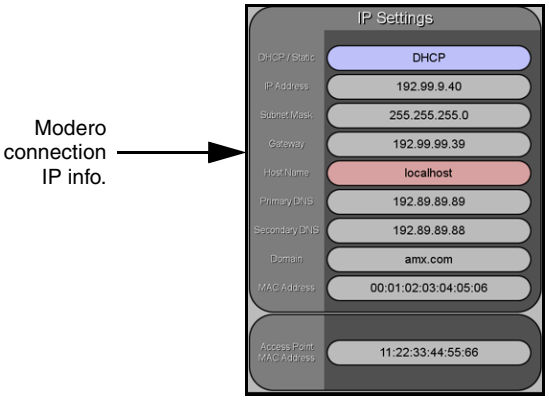

FIG. 79 Wireless Settings page (IP Settings section)

6. Press **Done** after you are finished assigning the alpha-numeric string of the host name.
7. Do not alter any of these remaining greyed-out fields in the IP Settings section. Once the panel is rebooted, these values are obtained by the unit and displayed in the *DNS* fields after power-up.

NOTE

The information can be found in either the Workspace - System name > Define Device section of your code (that defines the properties for your panel), or in the Device Addressing/Network Addresses section of the Tools > NetLinx Diagnostics dialog.

8. Setup the security and communication parameters between the wireless card and the target WAP by configuring the Wireless Settings section on this page. Refer to the *Step 2: Configuring the Card's Wireless Security Settings* section on page 104 for detailed procedures to setup either a secure or insecure connection.

Wireless communication using a Static IP Address

1. Press the **Protected Setup** button (located on the lower-left of the panel page) to open the Protected Setup page and display an on-screen keypad.
2. Enter ***1988*** into the Keypad's password field and press **Done** when finished.
3. Press the **Wireless Settings** button (located on the lower-left) to open the Wireless Settings page. Wireless communication is set within the IP Settings section of this page (FIG. 79).

NOTE

Check with your System Administrator for a pre-reserved Static IP Address assigned to the panel. This address must be obtained before Static assignment of the panel continues.

4. Toggle the *DHCP/Static* field (***from the IP Settings section***) until the choice cycles to **Static**. *The IP Address, Subnet Mask, and Gateway fields then become user-editable (red).*
5. Press the *IP Address* field to open a Keyboard and enter the Static IP Address (*provided by your System Administrator*).
6. Press **Done** after you are finished entering the IP information.
7. Repeat the same process for the *Subnet Mask* and *Gateway* fields.
8. Press the optional *Host Name* field to open the Keyboard and enter the Host Name information.
9. Press **Done** after you are finished assigning the alpha-numeric string of the host name.
10. Press the Primary DNS field to open a Keyboard, enter the Primary DNS Address (provided by your System Administrator) and press **Done** when compete. Repeat this process for the *Secondary DNS* field.
11. Press the Domain field to open a Keyboard, enter the resolvable domain Address (this is provided by your System Administrator and equates to a unique Internet name for the panel), and press **Done** when complete.
12. Setup the security and communication parameters between the wireless card and the target WAP by configuring the Wireless Settings section on this page. Refer to the following section for detailed procedures to setup either a secure or insecure connection.

Step 2: Configuring the Card's Wireless Security Settings

The second step to successfully setting up your wireless card is to configure the Wireless Settings section of the Wireless Settings page. The section configures both the communication and security parameters from the internal wireless card to the WAP. ***The procedures outlined within the following sections use an NXA-WAP200G and the target WAP.***

NOTE

Once you have completed setting up the wireless card parameters, you must then navigate to the System Settings page and configure the communication parameters for the target Master. Until those parameters are configured, your Connection Status icon will remain red (indicating that there is no current connection to a Master).

Configuring the Modero's wireless card for unsecured access to a WAP200G

1. Power-down the Modero unit and follow the wireless card installation procedures (on NXD panels) outlined in the *Step 2: Install the 802.11g mini-PCI Wireless Card* section on page 38.
2. Power-up the panel (this allows it to detect the card).
3. Press the **Protected Setup** button (located on the lower-left of the panel page) to open the Protected Setup page and display an on-screen keypad.
4. Enter ***1988*** into the Keypad's password field and press **Done** when finished.
5. Press the **Wireless Settings** button (located on the lower-left) to open the Wireless Settings page.
6. From within the Wireless Settings section of the Wireless Settings page, touch the *Network Name (SSID)* field (FIG. 80).

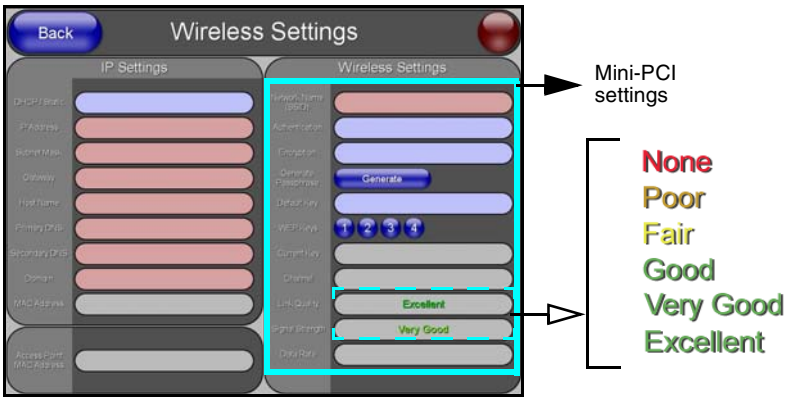

FIG. 80 Wireless Settings page (showing default values)

7. From the *Service Set Identifier* keyboard, enter the SSID name used by your target Wireless Access Point (**case sensitive**).
   - The card should be given the SSID used by the target WAP. If this field is left blank, the unit will attempt to connect to the first available WAP. By default, all WAP200Gs use AMX as their assigned SSID value.
   - One of the most common problems associated with connection to a WAP arise because the SSID was not entered properly. You must maintain the same case when entering the SSID information. ABC is not the same as Abc.
8. Toggle the *Authentication* field to an **Open System (default)**.
   - **Open System Authentication** allows any device to join the network if the panel's SSID matches the WAP's SSID.
9. Toggle the *Encryption* field until it reads **Clear Text (default)**.

NOTE

The remaining Wireless Settings fields are then greyed-out and become read-only. All NXA-WAP200Gs are factory-shipped as an unsecured WAP with no WEP encryption. The WAP200G initial Status page will display the status of both the WEP and WPA (both disabled).

10. Verify the fields in the *IP Settings* section have been properly configured. Refer to the *Step 1: Configuring the Panel's Wireless IP Settings* section on page 102 for detailed information.
11. Press the **Back** button to navigate to the Protected Setup page and press the on-screen **Reboot** button to both save any changes and restart the panel. ***Remember that you will need to navigate to the System Settings page and configure the connection to a target Master.***
12. After the panel restarts, return to the Wireless Settings page to verify the Link Quality and Signal Strength:
    - The bargraphs have been replaced with descriptions: **None**, **Poor**, **Fair**, **Good**, **Very Good**, and **Excellent** (FIG. 80).

NOTE

The signal strength field should provide some descriptive text regarding the strength of the connection to a Wireless Access Point. If there is no signal or no IP Address displayed; configuration of your network could be required.

Refer to the NXA-WAP200G Instruction Manual for more detailed setup and configuration procedures.

Configuring the Modero's wireless card for secured access to a WAP200G

After logging into the WAP200G, the default Status page appears within the web browser. These read-only values are "pulled" from some of the other user-configurable Configuration Utility pages. By default, wireless Modero panels are configured for unsecured communication to a Wireless Access Point. To properly setup both the WAP200G and panel for secure communication, you must first prepare the Modero panel and then use the information provided to fill out the fields within the WAP's browser-based Basic Wireless Configuration page.

Since the code key generator on Modero panels use the same key generation formula, all panels will generate identical keys for the same Passphrase. The generators used on WAPs will not produce the same key as the Modero generator even if you use the same Passphrase. **This is why we recommend creating the Current Key FIRST on the Modero and then entering that information into the appropriate WAP200G fields**.

1. Power-down the Modero unit and follow the wireless card installation procedures (on NXD panels) outlined in the *Step 2: Install the 802.11g mini-PCI Wireless Card* section on page 38.
    - When configuring touch panels for wireless communication, verify that **no Ethernet connector is installed** within the panel before the unit is power cycled.
2. Power-up the panel (this allows it to detect the card).
3. Press the **Protected Setup** button (located on the lower-left of the panel page) to open the Protected Setup page and display an on-screen keypad.
4. Enter ***1988*** into the Keypad's password field and press **Done** when finished.
5. Press the **Wireless Settings** button (located on the lower-left) to open the Wireless Settings page.
6. Locate the Wireless Settings section of the Wireless Settings page (FIG. 81).

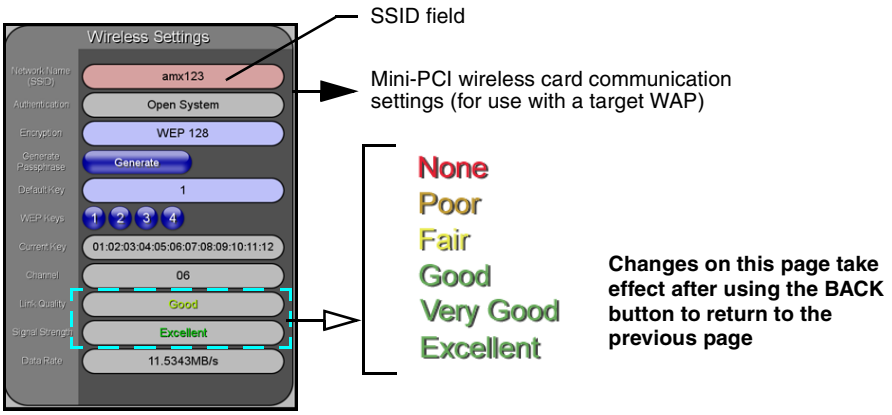

FIG. 81 Wireless Settings page (Wireless Settings section)

NOTE

You must first take the SSID name, Current Key string value, and panel MAC Address information and then later enter it into the appropriate WAP dialog fields in order to "sync-up" the secure connection. These values must be identically reproduced on the target WAP.

7. Touch the *Network Name (SSID)* field and from the *Service Set Identifier* keyboard, enter the SSID name you will be using on your target Wireless Access Point (**case sensitive**).

- The card should be given the SSID used by the target WAP. If this field is left blank, the unit will attempt to connect to the first available WAP. By default, all WAP200Gs use AMX as their assigned SSID value.
- One of the most common problems associated with connection to a WAP arise because the SSID was not entered properly. You must maintain the same case when entering the SSID information. ABC is not the same as Abc.
- The alpha-numeric string is by default **AMX** but can later be changed to any 32-character entry. *This string must be duplicated within the Network Name (SSID) field on the WAP.*
- As an example, if you use TECHPUBS as your SSID, you must **match this word and the case** within both the *Network Name (SSID)* field on the touch panel's *Network Name SSID* field and on the WAP's *Basic Wireless Configuration* page.

8. Leave the *Authentication* field reading **Open System (default)**.

- **Open System Authentication** allows any device to join the network if the panel's SSID matches the WAP's SSID. ***An Open System is recommended for communication between Modero panels and an NXA-WAP200G.***
- **Shared Key Authentication** requires that the panel and the Wireless Access Point have the same WEP Key to authenticate.

9. Toggle the *Encryption* field (FIG. 81) until it reads **WEP64** or **WEP128**. *The 64/128 selection reflects the bit-level of encryption security. This WEP encryption level must match the encryption level being used on the WAP.*

NOTE

WEP will not work unless the same Default Key is set on both the panel and the Wireless Access Point.
For example: if you have your Wireless Access Point set to default key 4 (which was 01:02:03:04:05), you must set the panel's key 4 to 01:02:03:04:05.

10. Toggle the *Default Key* field until the you've chosen a WEP Key value (**from 1- 4**) that matches what you'll be using on your target WAP200G.

- **These WEP Key identifier values must match for both devices.**

11. With the proper WEP Key value displayed, press the **Generate** button to launch the WEP Passphrase keyboard.
If you are wanting to have your target WAP (other than a 200G) generate the Current Key - Do not press the Generate button and continue with Step 14.

- This keyboard allows you to enter a Passphrase (such as *AMXPanel*) and then AUTOMATICALLY generate a WEP key which is compatible only among Modero panels.

NOTE

The code key generator on Modero panels use the same key generation formula. Therefore, this same Passphrase generates identical keys when done on any Modero because they all use the same Modero-specific generator. The Passphrase generator is case sensitive.

12. Within this on-screen WEP Passphrase keyboard (FIG. 82), enter a character string or word (such as ***AMXPanel***) and press **Done** when you have finished.

FIG. 82 WEP Passphrase Keyboard

- As an example, enter the word **AMXPanel** using a 128-bit hex digit encryption. After pressing **Done**, the on-screen Current Key field displays a long string of characters (separated by colons) which represents the encryption key equivalent to the word AMXPanel.
- This series of hex digits (26 hex digits for a 128-bit encryption key) should be entered as the *Current Key* into both the WAP and onto other communicating Modero panels by using the WEP Key dialog (FIG. 83).

FIG. 83 WEP Key # Keyboard

13. Write down this Current Key string value for later entry into your WAP's *WEP Key* field (*typically entered without colons*) and into the communicating panel's *Current Key* field (FIG. 81).
14. **If you are entering a Current Key generated either by your target WAP or another Modero panel**, within the *WEP Keys* section, touch the **Key #** button to launch the *WEP Key #* keyboard (FIG. 83), enter the characters and press **Don**e when finished.
    - This Key value corresponds to the Default WEP Key number used on the Wireless Access Point and selected in the Default Key field described in the previous step.

NOTE

If your target Wireless Access Point does not support passphrase key generation and has previously been setup with a manually entered WEP KEY, you must manually enter that same WEP key on your panel.

15. Verify the fields within the IP Settings section have been properly configured.
    Refer to the *Step 1: Configuring the Panel's Wireless IP Settings* section on page 102 for detailed information.
16. Press the **Back** button to navigate to the Protected Setup page and press the on-screen **Reboot** button to both save any changes and restart the panel. ***Remember that you will need to navigate to the System Settings page and configure the connection to a target Master.***
17. After the panel restarts, return to the Wireless Settings page to verify the Link Quality and Signal Strength:
    - The bargraphs have been replaced with descriptions: **None**, **Poor**, **Fair**, **Good**, **Very Good**, and **Excellent**.

NOTE

The signal strength field provides some descriptive text regarding the strength of the connection to a Wireless Access Point. If there is no signal or no IP Address displayed; configuration of your network could be required.

Refer to the NXA-WAP200G Instruction Manual for more detailed setup and configuration procedures.

Configuring multiple wireless Moderos to communicate to a target WAP200G

1. For each communicating touch panel, complete all of the steps outlined within the previous *Configuring the Modero's wireless card for secured access to a WAP200G* section on page 105.
    - Those procedures walk you through assigning an SSID, selecting a WEP encryption level, and obtaining a Current Key string value for a specific WEP Key on a target panel.
2. Navigate back to the Wireless/Wireless Settings page on each panel.
3. Verify that all communicating Modero panels are using the same **SSID**, **encryption level**, **Default Key #**, and an identical **Current Key value**.
    - As an example, all panels should be set to Default Key **#1** and be using **aa:bb:cc**..as the Current Key string value. This same Key value and Current Key string should be used on the target WAP.
4. Repeat steps 1 - 3 on each panel. **Using the same passphrase, generates the same key for all communicating Modero panels.**

Configuring a Wired Ethernet Connection

It is necessary to tell the panel which Master it should be communicating with. This "pointing to a Master" is done via the System Settings page where you configure the IP Address, System Number and Username/Password information assigned to the target Master. If you have previously established a wireless connection to the Internet you must still navigate to the System Settings page and configure the communication parameters for the target Master. Until those parameters are configured, your Connection Status icon will remain red (*indicating there is no current connection to a Master*).

- If you have previously configured an internal wireless card for communication to the Internet, you do not need to configure the panel's IP Settings fields and can skip the following Step 1.

Step 1: Configuring the Panel's Wired IP Settings

There are only two available methods of communicating to a target Master over the Internet: Wireless (via an internal card) or Wired (direct Ethernet connection). If you are not using an internal wireless card, you can only configure the connection parameters through the System Settings page. This type of communication can be established either via either a Dynamic IP Address (*DHCP*) or via a pre-reserved Static IP Address (*typically provided by your System Administrator*).

IP Settings section - Configuring a DHCP Address over Ethernet

1. Select **Protected Setup** > **System Settings** (located on the lower-left) to open the System Settings page.
2. Locate the IP Settings section of this page.

WARNING

Even though the Host, Gateway, Primary DNS, Secondary DNS, and Domain fields appear on the two separate System Settings and Wireless Settings pages; ***the information populating these fields is identical.***
If the information within one of these fields is altered, the change is reflected on both pages within the altered field.
Example*: Domain is altered on Wireless Settings page, the value is then also changed within the Domain field of the System Settings page.*

3. Toggle the *DHCP/Static* field (***from the IP Settings section***) until the choice cycles to **DHCP**.

NOTE

DHCP will register the unique MAC Address (factory assigned) on the panel and once the communication setup process is complete, reserve an IP Address, Subnet Mask, and Gateway values from the DHCP Server.

4. Press the optional *Host Name* field to open a Keyboard and enter the Host Name information.
5. Press **Done** after you are finished assigning the alpha-numeric string of the host name.
6. Do not alter any of the remaining greyed-out fields in the IP Settings section. *Once the panel is rebooted, these values are obtained by the unit and displayed in the DNS fields after power-up*.

NOTE

The information can be found in either the: Workspace- System name > Define Device section of your code (that defines the properties for your panel), or in the Device Addressing/Network Addresses in the Tools > NetLinx Diagnostics dialog.

7. Press the **Back** button to return to the Protected Setup page.
8. Press the on-screen **Reboot** button to both save any changes and restart the panel.

IP Settings section - Configuring a Static IP Address over Ethernet

1. Select **Protected Setup** > **System Settings** (located on the lower-left) to open the System Settings page.
2. Locate the IP Settings section of this page.

NOTE

Check with your System Administrator for a pre-reserved Static IP Address assigned to the panel. This address must be obtained before Static assignment of the panel continues.

3. Toggle the *DHCP/Static* field (***from the IP Settings section***) until the choice cycles to **Static**.
4. Press the *IP Address* field to open a Keyboard and enter the Static IP Address (*provided by your System Administrator*).
5. Press **Done** after you are finished entering the IP information.
6. Repeat the same process for the *Subnet Mask* and *Gateway* fields.
7. Press the optional *Host Name* field to open the Keyboard and enter the Host Name information.
8. Press **Done** after you are finished assigning the alpha-numeric string of the host name.
9. Press the *Primary DNS* field to open a Keyboard, enter the Primary DNS Address (provided by your System Administrator) and press **Done** when compete. Repeat this process for the *Secondary DNS* field.
10. Press the *Domain* field to open a Keyboard, enter the resolvable domain Address (*this is provided by your System Administrator and equates to a unique Internet name for the panel*), and press **Done** when complete.
11. Navigate to the Master Connection section of this page to begin configuring the communication parameters for the target Master.

Step 2: Choosing a Master Connection Mode Setting

There are three Ethernet MODE settings used in the Master Connection section of the System Settings page. **URL is the most common method.**

- **Master Connection MODE** options:

- **URL** (**Uniform Resource Locator**) is the address that defines the route to a file on the Web or any other Internet facility.
  In this system, the panel acts as a "Client" and the Master acts as a Server (in that Clients attach to it).
- **LISTEN** sets the Modero panel to "listen" for broadcasts from the Master (using the panel IP from its URL list). In this system, the panel acts as a "Server" (in that Clients attach to it) and the Master acts as a "Client".
- **AUTO** is used to instruct the Modero to search for a Master that uses the same System Number (assigned within the Master Connection section) and resides on the same Subnet as itself. In this case, the Master has its UDP feature enabled.
  This **UDP** (**User Datagram Protocol**) is a protocol within the TCP/IP protocol suite that is used in place of TCP when a reliable delivery is not required.
  This UDP enabling is done through a Telnet session on the Master. Refer to the particular NetLinx Master manual for more detailed information.

Step 3: Configuring the Ethernet Connection Type

NOTE

When using Ethernet as your communication method, the NetLinx Master must first be setup with either a Static IP or DHCP Address obtained from either NetLinx Studio or your System Administrator.

Before beginning:

1. Verify the panel has been configured to communicate either through an Ethernet cable (connected from either the panel to a valid Ethernet Hub) or to a wirelessly to the Wireless Access Point (WAP).

WARNING

Before commencing, verify you are using the latest NetLinx Master firmware.

2. Verify that the NetLinx Master is receiving power and is communicating via an Ethernet connection with the PC running NetLinx Studio.
3. Connect the terminal end of the 12 VDC-compliant power supply cable to the power connector on the rear/side of the touch panel.
4. Verify the green Ethernet LED (from the rear Ethernet port on the Master) is illuminated (indicating a proper connection).
5. Verify the yellow LED (from the rear Ethernet port on the Master) is blinking (indicating communication).
6. After the panel powers-up, press and hold the grey Front Setup Access button (**for 3 seconds**) to proceed to the Setup page.
7. Select **Protected Setup > System Settings** (located on the lower-left) to open the System Settings page (FIG. 84).

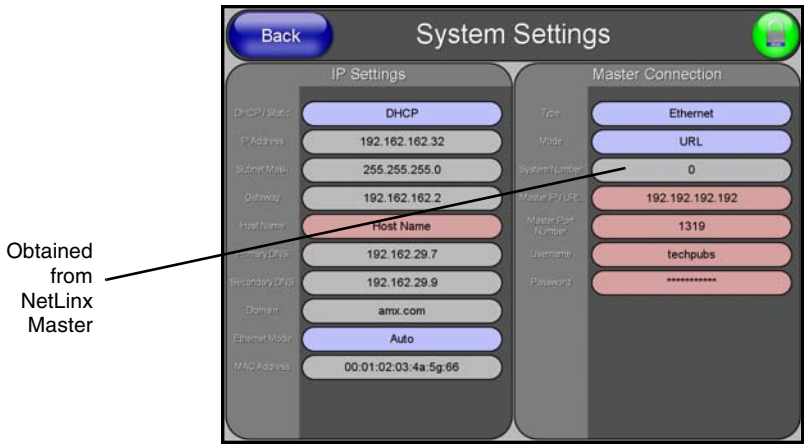

FIG. 84 System Settings page

Master Connection - Virtual Master communication over Ethernet

NOTE

When configuring your panel to communicate with a Virtual Master (on your PC) via Ethernet, the Master IP/URL field must be configured to match the IP Address of the PC and make sure to use the Virtual System value assigned to the Virtual Master within NetLinx Studio.

Before beginning:

1. Verify the panel has been configured to communicate either through an Ethernet cable (connected from either the panel to a valid Ethernet Hub) or wireless to the Wireless Access Point.
2. Launch NetLinx Studio 2.x (default location is **Start** > **Programs** > **AMX Control Disc** > **NetLinx Studio 2** > **NetLinx Studio 2**).
3. Select **Settings** > **Master Communication Settings**, from the Main menu to open the Master Communication Settings dialog (FIG. 85).

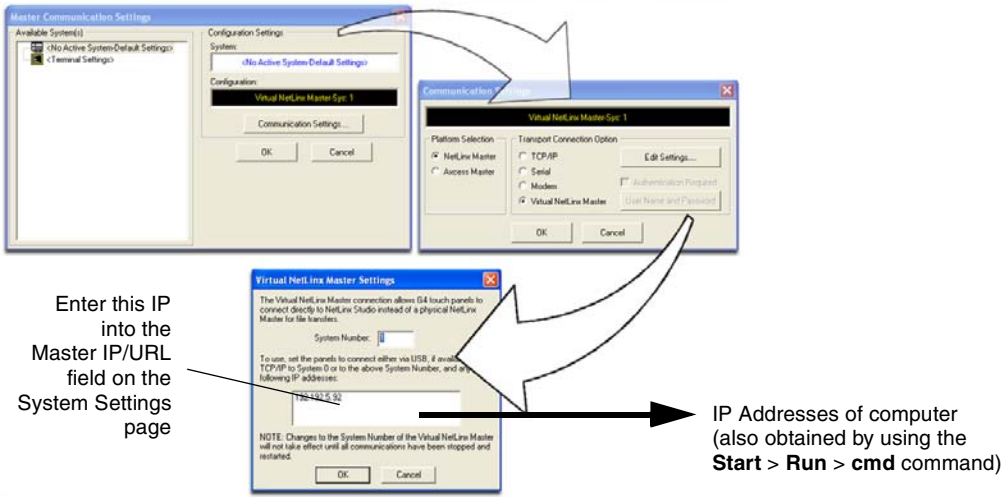

FIG. 85 Assigning Communication Settings and TCP/IP Settings for a Virtual Master

4. Click the **Communications Settings** button to open the Communications Settings dialog.
5. Click on the **NetLinx Master** radio button (*from the Platform Selection section*) to indicate that you are working as a NetLinx Master.
6. Click on the **Virtual Master** radio box (*from the Transport Connection Option section*) to indicate you are wanting to configure the PC to communicate with a panel. Everything else such as the Authentication is greyed-out because you are not going through the Master's UI.
7. Click the **Edit Settings** button (*on the Communications Settings dialog*) to open the Virtual NetLinx Master Settings dialog (FIG. 85).
8. From within this dialog enter the System number (***default is 1***) and note the IP Address of the target PC being used as the Virtual Master. This IP Address can also be obtained by following these procedures:
   - On your PC, click **Start** > **Run** to open the Run dialog.
   - Enter **cmd** into the Open field and click **OK** to open the command DOS prompt.
   - From the **C:\>** command line, enter **ipconfig** to display the IP Address of the PC. This information is entered into the *Master IP/URL* field on the panel.
9. Click **OK** three times to close the open dialogs, save your settings, and return to the main NetLinx Studio application.

10. Click the **OnLine Tree** tab in the Workspace window to view the devices on the Virtual System. *The default System value is one*.
11. Right-click on the *Empty Device Tree/System* entry and select **Refresh System** to re-populate the list.
12. Power-up your panel and press and hold the grey Front Setup Access button (**for 3 seconds**) to continue with the setup process and proceed to the Setup page.
13. Select **Protected Setup** > **System Settings** (located on the lower-left) to open the System Settings page (FIG. 86).

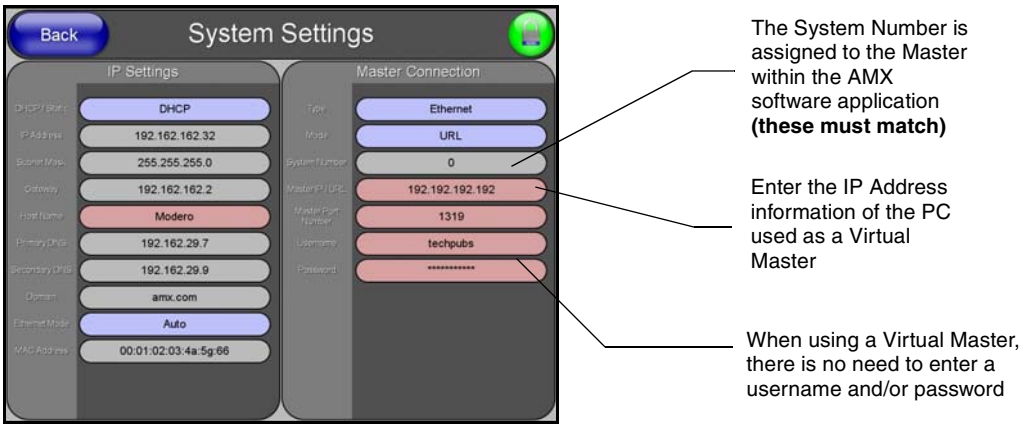

FIG. 86 Sample System Settings page (for Virtual Master communication)

14. Press the blue *Type* field (***from the Master Connection section***) until the choice cycles to the word **Ethernet.** ***ICSNet communication cannot be used on either 1200V-Series or VG-Series panels.***
15. Press the *Mode* field until the choice cycles to the word **URL**.
    - By selecting **URL**, the System Number field becomes read-only (grey) because the panel pulls this value directly from the communicating target Master (virtual or not). A Virtual Master system value can be set within the active AMX software applications such as: NetLinx Studio, TPD4, or IREdit.
16. Press the *Master IP/URL* field to open a Keyboard and enter the IP Address of the PC used as the Virtual Master.
17. Click **Done** to accept the new value and return to the System Settings page.
18. Do not alter the Master Port Number value (*this is the default value used by NetLinx*).
19. Press the **Back** button to open the Protected Setup page.
20. Press the on-screen **Reboot** button to both save any changes and restart the panel.

Master Connection section - NetLinx Master Ethernet IP Address - URL Mode

In this mode, enter the System Number (**zero** for an unknown System Number) and the IP/URL of the Master (Master Port Number is defaulted to **1319**).

1. Press the blue *Type* field (***from the Master Connection section***) until the choice cycles to the word **Ethernet**. Refer to the *System Settings Page* section on page 166 for more information about the fields on this page.
2. Press the *Mode* field until the choice cycles to the word **URL**.
   - By selecting **URL**, the System Number field becomes read-only (grey) because the panel pulls this value directly from the communicating target Master (virtual or not). A Virtual Master system value can be set within the active AMX software applications such as: NetLinx Studio, TPD4, or IREdit.

NOTE

If the panel does not appear within the OnLine Tree tab of the Workspace window of NetLinx Studio, check to make sure that the NetLinx Master System Number (from within the Device Addressing dialog) is correctly assigned.

3. Press the *Master IP/URL* field to open a Keyboard and enter the Master IP Address **(obtained from the Diagnostics - Networking Address dialog of the NetLinx Studio application)**.
4. Click **Done** to accept the new value and return to the System Settings page.
5. Do not alter the Master Port Number value (*this is the default value used by NetLinx*).
6. Enter a username and password (*into their respective fields*) if the target Master has been previously secured.
7. Press the **Back** button to open the Protected Setup page.
8. Press the on-screen **Reboot** button to both save any changes and restart the panel.

Master Connection section - NetLinx Master Ethernet IP Address - Listen Mode

In this mode, you must add the Modero panel IP Address into the URL List of the Master (using NetLinx Studio). This mode sets the Modero panel to "listen" for broadcasts from the Master (using the panel IP from its URL list).

1. Obtain either a Static IP for the Modero panel (from your System Administrator) or a DHCP Address from the IP Settings of the System Settings page.
   - The *DHCP/Static* field (in the IP Settings section of the System Settings page) must be set to **DHCP** to get Dynamic IP information for the panel.
   - Press the on-screen **Reboot** (from the Protected Setup page) to both save any changes and restart the panel.
   - After power-up, press the grey Front Setup Access button for **3 seconds** to access the Setup page.
   - Navigate to the **Setup > Protected Setup > System Settings** page and note the newly obtained Dynamic IP Address information from the IP Settings section. This information is then entered into the URL List for the connected NetLinx Master.
2. Toggle the blue *Type* field until **Ethernet** is selected (*from the Master Connection section of the System Settings page*).
3. Press the *Mode* field (to set the connection Mode) until the choice cycles to the word **Listen**.
4. Enter a username and password (*into their respective fields*) if the target Master has been previously secured.
5. Select the **OnLine Tree** tab from the Workspace window.

6. Select **Diagnostics > URL Listing** from the Main menu (FIG. 87).

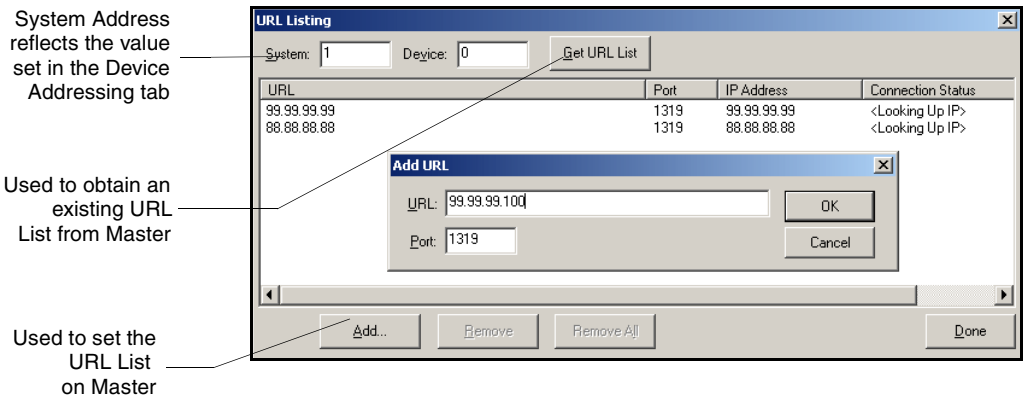

FIG. 87 URL List dialog

7. Enter the **System** and **Device** number for the specific Master associated with your panel (*as seen in the Online Tree tab*).
8. Click **Add** and enter the IP Address of the Modero touch panel into the *Add URL* dialog box.
9. Click **OK** to enter your IP Address and add it to the list.
10. Click **Done** once you are finished adding your panel information to the list.
11. Press the on-screen **Reboot** button to save any changes and restart the panel.

Master Connection section - NetLinx Master Ethernet IP Address - Auto Mode

In this mode, enter the System Number of the NetLinx Master. This mode instructs the Modero to search for a Master that uses the same System Number (assigned within the Master Connection section) and **resides on the same Subnet as itself.**

1. Toggle the blue *Type* field until **Ethernet** is selected (*from the Master Connection section of the System Settings page*).
2. Press the *Mode* field until the choice cycles to the word **Auto**.
3. Press the *System Number* field to launch a Keypad and enter the value for the system number of the NetLinx Master. *This value can be obtained from the NetLinx Studio program > OnLine Tree of the Workspace window.*
4. Do not alter the IP Settings section, of the System Settings page, as these fields are not applicable to this connection mode.
5. Enter a username and password (*into their respective fields*) if the target Master has been previously secured.
6. Press the on-screen **Reboot** button to both save any changes and restart the panel.
7. Press the grey Front Setup Access button for **3 seconds** to open the Setup page and confirm there is an active connection.

NOTE

The NetLinx Master and the Modero panel must both be on the same Subnet.

Using G4 Web Control to Interact with a G4 Panel

The G4 Web Control feature allows you to use a PC to interact with a G4 enabled panel via the web. This feature works in tandem with the new browser-capable NetLinx Security firmware update (***build 300 or higher***). G4 Web Control is only available with the latest Modero panel firmware.

Refer to the *G4 Web Control Page* section on page 156 for more detailed field information.

NOTE

Verify your NetLinx Master (ME260/64 or NI-Series) has been installed with the latest firmware KIT file from ***www.amx.com****. Refer to your NetLinx Master Instruction Manual for more detailed information on the use of the new web-based NetLinx Security.*

1. Press the grey Front Setup Access button for **3 seconds** to open the Setup page.
2. Press the **Protected Setup** button (located on the lower-left of the panel page) to open the Protected Setup page and display an on-screen keypad.
3. Enter ***1988*** into the Keypad's password field (***1988*** *is the default password*).

NOTE

Clearing Password #5, from the initial Password Setup page, removes the need for you to enter the default password before accessing the Protected Setup page.

4. Press **Done** when finished.
5. Press the **G4 Web Control** button to open the G4 Web Control page (FIG. 88).

FIG. 88 G4 Web Control page

6. Press the **Enable/Enabled** button until it toggles to **Enabled** (*light blue color*).
7. The *Network Interface Select* field is read-only and displays the method of communication to the web. **Verify you have selected the proper interface connection as this field does not auto-detect the connection type being used (*see below*).**
   - **Wired** is used when a direct Ethernet connection is being used for communication to the web. *This is the default setting if either no wireless interface card is detected or if both an Ethernet and wireless card connection is detected by the panel.*
   - **Wireless** is used when a wireless card is detected within the internal card slot. This method provides an indirect communication to the web via a pre-configured Wireless Access Point.
8. Press the *Web Control Name* field to open the Web Name keyboard.

9. From the Web Name keyboard, enter a unique alpha-numeric string to identify this panel. This information is used by the NetLinx Security Web Server to display on-screen links to the panel. *The on-screen links use the IP Address of the panel and not the name for communication* (FIG. 89).

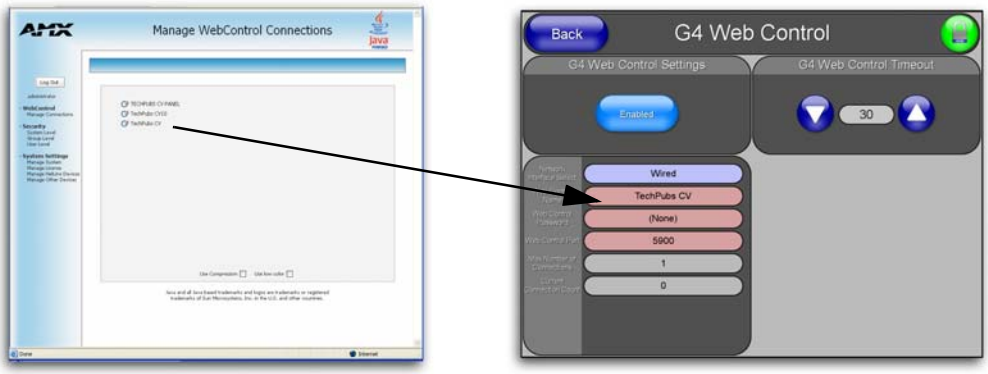

FIG. 89 Sample relationship between G4 Web Control and Mange WebControl Connections window

10. Press **Done** after you are finished assigning the alpha-numeric string for the Web Control name.
11. Press the *Web Control Password* field to open the Web Password keyboard.
12. From the Web Password keyboard, enter a unique alpha-numeric string to be assigned as the G4 Authentication session password associated with VNC web access of this panel.
13. Press **Done** after you are finished assigning the alpha-numeric string for the Web Control password.
14. Press the *Web Control Port* field to open the Web Port Number keypad.
15. Within the keypad, enter a unique numeric value to be assigned to the port the VNC Web Server is running on. The default value is ***5900***.
16. Press **Done** when you are finished entering the value. *The remaining fields within the G4 Web Control Settings section of this page are read-only and cannot be altered.*
17. Press the **Up/Down** arrows on either sides of the G4 Web Control *Timeout* field to increase or decrease the amount of time the panel can remain idle (***no cursor movements***) before the session is closed and the user is disconnected.
18. Press the **Back** button to open the Protected Setup page.
19. Press the on-screen **Reboot** button to save any changes and restart the panel.

NOTE

Verify your NetLinx Master's IP Address and System Number have been properly entered into the Master Connection section of the System Settings page.

Using your NetLinx Master to control the G4 panels

Refer to your particular NetLinx Master's instruction manual for detailed information on how to download the latest firmware from **www.amx.com**. This firmware build enables SSL certificate identification and encryption, HTTPS communication, ICSP data encryption, and disables the ability to alter the Master security properties via a TELNET session.

NOTE

In order to fully utilize the SSL encryption, your web browser should incorporate the an encryption feature. This encryption level is displayed as a Cipher strength.

Once the Master's IP Address has been set through NetLinx Studio:

1. Launch your web browser.
2. Enter the IP Address of the target Master (***ex: http://198.198.99.99***) into the web browser's *Address* field.
3. Press the **Enter** key on your keyboard to begin the communication process between the target Master and your computer.
   - Initially, the Master Security option is disabled (from within the **System Security** page) and no username and password is required for access or configuration.
   - Both HTTP and HTTPS Ports are enabled by default (via the **Manage System** > **Server** page).
   - If the Master has been previously configured for secured communication, click **OK** to accept the AMX SSL certificate (*if SSL is enabled*) and then enter a valid username and password into the fields within the *Login* dialog.
4. Click **OK** to enter the information and proceed to the Master's Manage WebControl Connections window.
5. This Manage WebControl Connections page (FIG. 90) is accessed by clicking on the **Manage connections** link (*within the Web Control section within the Navigation frame*). Once activated, this page displays links to G4 panels running the latest G4 Web Control feature (*previously setup and activated on the panel*).

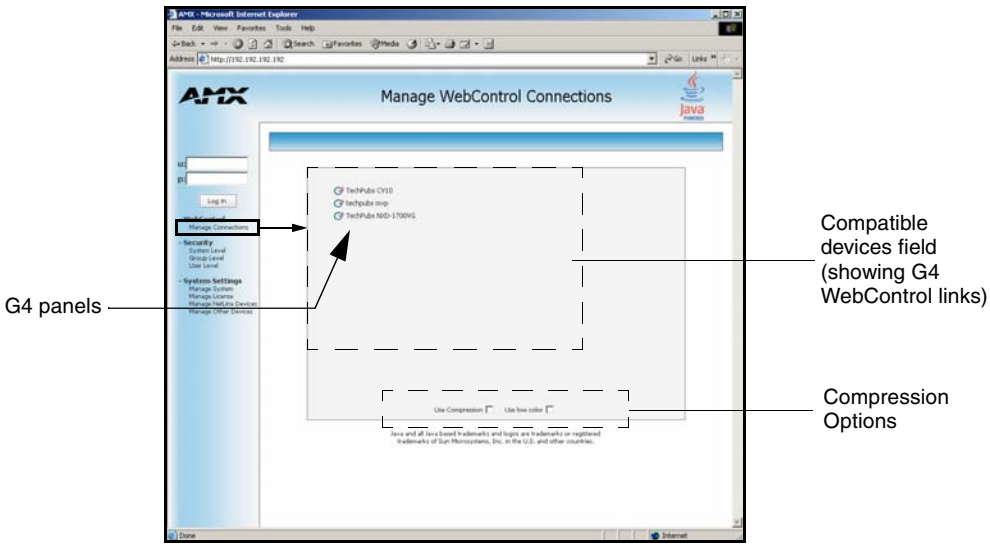

FIG. 90 Manage WebControl Connections page (populated with compatible panels)

6. Click on the G4 panel name link associated with the target panel. A secondary web browser window appears on the screen (FIG. 91).

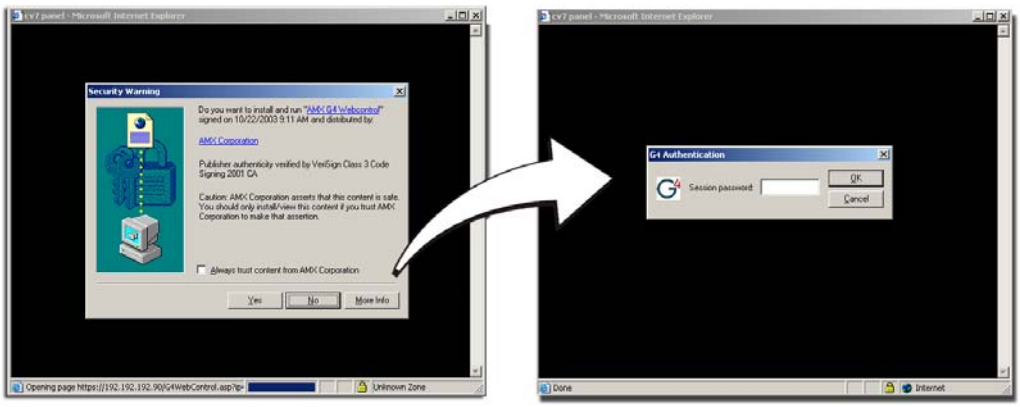

FIG. 91 Web Control VNC installation and Password entry screens

7. Click **Yes** from the Security Alert popup window to agree to the installation of the G4 WebControl application on your computer. This application contains the necessary Active X and VNC client applications necessary to properly view and control the panel pages from your computer.

NOTE

The G4 Web Control application is sent by the panel to the computer that is used for communication. Once the application is installed, this popup will no longer appear. This popup will only appear if you are connecting to the target panel using a different computer.

8. In some cases, you might get a *Connection Details* dialog (FIG. 92) requesting a VNC Server IP Address. This is the IP Address not the IP of the Master but of the target touch panel. Depending on which method of communication you are using, it can be found in either the:
   - **Wired Ethernet** - System Settings > IP Settings section within the *IP Address* field.
   - **Wireless** - Wireless Settings > IP Settings section within the *IP Address* field.
   - If you do not get this field continue to step 9.

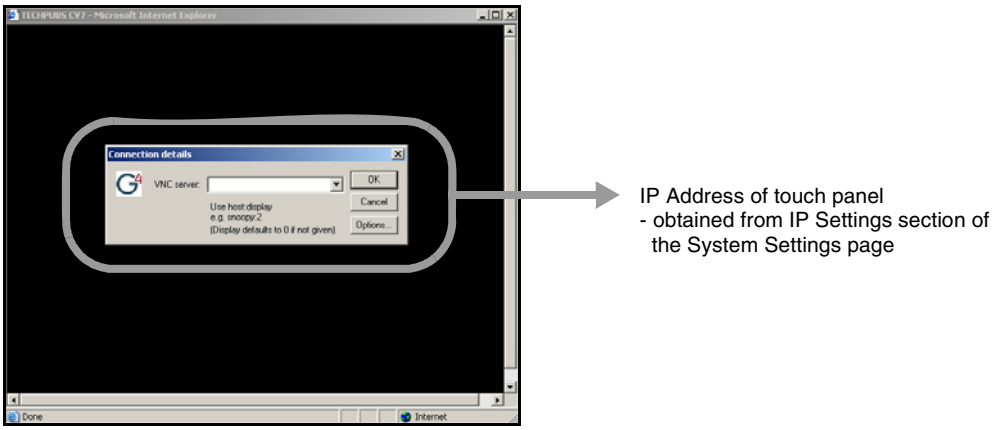

FIG. 92 Connection Details dialog

9. If a WebControl password was setup on the G4 WebControl page, a G4 Authentication Session password dialog box appears on the screen within the secondary browser window.

10. Enter the Web Control session password into the *Session Password* field (FIG. 91). *This password was previously entered into the Web Control Password field within the G4 Web Control page on the panel.*
11. Click **OK** to send the password to the panel and begin the session. A confirmation message appears stating *"Please wait, Initial screen loading."*.

The secondary window then becomes populated with the same G4 page being displayed on the target G4 panel. A small circle appears within the on-screen G4 panel page and corresponds to the location of the mouse cursor. A left-mouse click on the computer-displayed panel page equates to an actual touch on the target G4 panel page.

Upgrading Modero Firmware

Overview

Before beginning the Upgrade process:

- Setup and configure your NetLinx Master. Refer to your particular NetLinx Master instruction manual for detailed setup procedures.
- Calibrate and prepare the communication pages on the Modero panel for use. Refer to the *Panel Calibration* section on page 91.
- Refer to the NetLinx Studio version 2.x or higher Help file for more information on uploading files via Ethernet.
- Configure your panel for either direct connect or wireless communication. Refer to the *Configuring Communication* section on page 93 for more detailed information about Ethernet or Wireless communication.

WARNING

It is recommended that firmware KIT files only be transferred over a direct Ethernet connection and only when the panel is connected to a power supply.
If battery power or wireless connection fails during a firmware upgrade, the panel flash file system may become corrupted.

The process of updating firmware involves the use of a communicating NetLinx Master. The required steps for updating firmware to a Modero panel are virtually identical to those necessary for updating Kit files to a NetLinx Master (*except the target device is a panel instead of a Master*). Refer to either your Master's literature or Studio 2.x Help file for those procedures.

WARNING

A touch panel which is not using a valid username and password will not be able to communicate with a secured Master. If you are updating the firmware on or through a panel which is not using a username or password field, you must first remove the Master Security feature to establish an unsecured connection.

Upgrading the Modero Firmware via the USB port

Before beginning with this section, verify your panel is powered and the Type-A USB connector is securely inserted into the PC's USB port. **The panel must be powered-on before connecting the mini-USB connector to the panel.**

WARNING

Establishing a USB connection between the PC and the panel, prior to installing the latest NetLinx Studio and TPDesign4 applications will cause a failure in the USB driver installation.
This driver must first be saved to the PC as part of the new NetLinx Studio and TPDesign4 application installations.

Step 1: Configure the panel for a USB Connection Type

1. After the installation of the USB driver has been completed, confirm the proper installation of the large Type-A USB connector to the PC's USB port, and restart your machine.
2. After the panel powers-up, press and hold the grey Front Setup Access button (**for 3 seconds**) to continue with the setup process and proceed to the Setup page.
3. Select **Protected Setup** > **System Settings** (located on the lower-left) to open the System Settings page.
4. Toggle the blue *Type* field (***from the Master Connection section***) until the choice cycles to **USB**.

NOTE

***ALL** fields are then greyed-out and read-only, but still display any previous network information.*

5. Press the **Back** button on the touch panel to return to the Protected Setup page.
6. Press the on-screen **Reboot** button to both save any changes and **restart the panel.** *Remember that the panel's connection type must be set to **USB** prior to rebooting the panel and prior to inserting the USB connector.*
7. **ONLY AFTER** the unit displays the first panel page, **THEN** insert the mini-USB connector into the Program Port on the panel. It may take a minute for the panel to detect the new connection and send a signal to the PC (*indicated by a green System Connection icon*).
   - If a few minutes have gone by and the System Connection icon still does not turn green, complete the procedures in the following section to setup the Virtual Master and refresh the System from the Online Tree. This action sends out a request to the panel to respond and completes the communication (*turning the System Connection icon green*).
8. Navigate back to the System Settings page.

Step 2: Prepare NetLinx Studio for communication via the USB port

1. Launch NetLinx Studio 2.x (default location is **Start > Programs > AMX Control Disc > NetLinx Studio 2 > NetLinx Studio 2**).
2. Select **Settings > Master Communication Settings**, from the Main menu to open the Master Communication Settings dialog (FIG. 93).

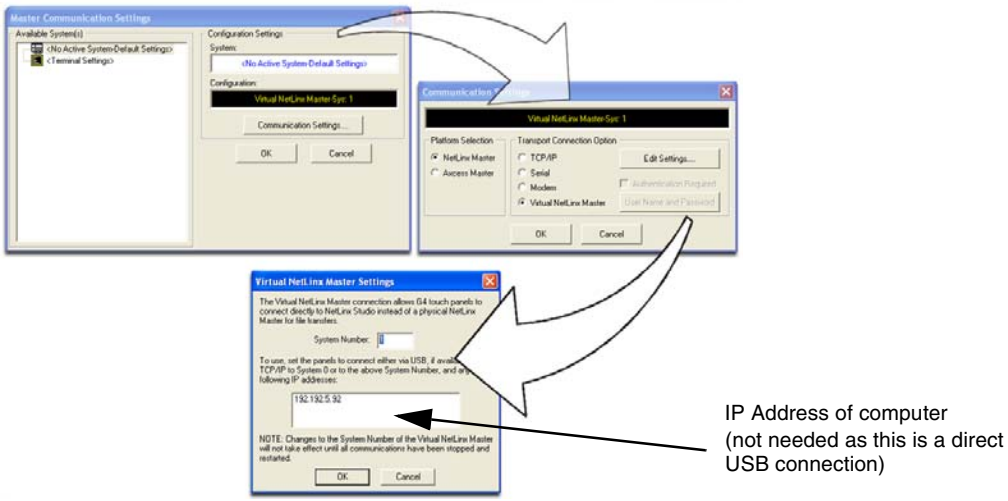

FIG. 93 Assigning Communication Settings for a Virtual Master

3. Click the **Communications Settings** button to open the *Communications Settings* dialog.
4. Click on the **NetLinx Master** radio button (*from the Platform Selection section*) to indicate that you are working as a NetLinx Master.
5. Click on the **Virtual Master** radio box (*from the Transport Connection Option section*) to indicate you are wanting to configure the PC to communicate directly with a panel. Everything else such as the Authentication is greyed-out because you are not going through the Master's UI.
6. Click the **Edit Settings** button (*on the Communications Settings dialog*) to open the *Virtual NetLinx Master Settings* dialog (FIG. 93).

7. From within this dialog enter the System number (default is **1**).
8. Click **OK** three times to close the open dialogs, save your settings, and return to the main NetLinx Studio application.
9. Click the **OnLine Tree** tab in the Workspace window to view the devices on the Virtual System. *The default System value is one*.
10. Right-click on the *Empty Device Tree/System* entry and select **Refresh System** to re-populate the list.
    The panel will not appear as a device below the virtual system number (in the Online Tree tab) until both the system number used in step 7 for the VNM is entered into the Master Connection section of the System Settings page and the panel is restarted.

Step 3: Confirm and Upgrade the firmware via the USB port

Use the CC-USB Type-A to Mini-B 5-wire programming cable (**FG10-5965**) to provide communication between the mini-USB Program port on the touch panel and the PC. This method of communication is used to transfer firmware KIT files and TPD4 touch panel files.

NOTE

A mini-USB connection is only detected after it is installed onto an active panel. Connection to a previously powered panel which then reboots, allows the PC to detect the panel and assign an appropriate USB driver.

1. Verify this direct USB connection (Type-A on the panel to mini-USB on the panel) is configured properly using the steps outlined in the previous two sections.
2. With the panel already configured for USB communication and the Virtual Master setup within NetLinx Studio, its now time to verify the panel is ready to receive files.
3. After the Communication Verification dialog window verifies active communication between the Virtual Master and the panel, click the **OnLine Tree** tab in the Workspace window (FIG. 94) to view the devices on the Virtual System. *The default System value is one*.
4. Right-click on the System entry (FIG. 94) and select **Refresh System** to re-populate the list. Verify the panel appears in the **OnLine Tree** tab of the Workspace window. *The default Modero panel value is 10001*.

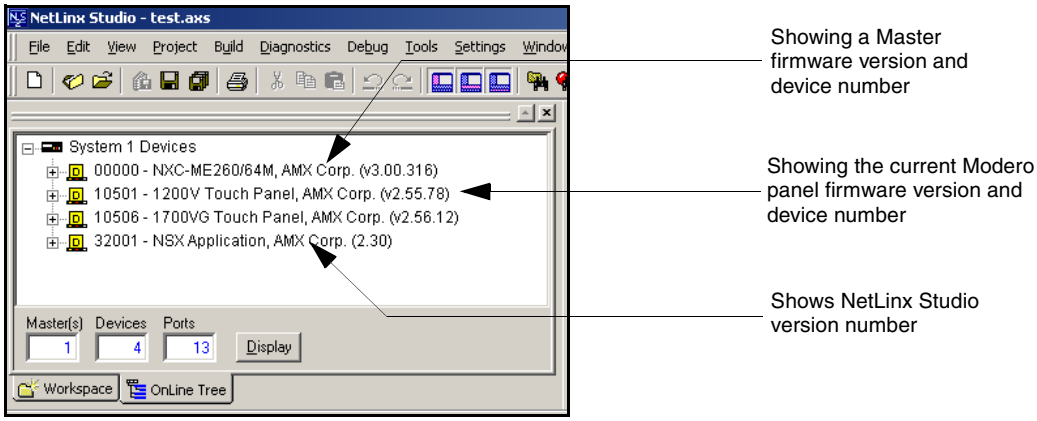

FIG. 94 NetLinx Workspace window (showing panel connection via a Virtual NetLinx Master)

NOTE

*The panel firmware is shown on the right of the listed panel. Download the latest firmware file from **www.amx.com** and then save the KIT file to your computer.*

5. If the panel firmware being used is not current, download the latest Kit file by first logging in to **www.amx.com** and then navigate to **Tech Center > Firmware Files** and from within the **Modero** section of the web page locate your Modero panel.
6. Click on the desired Kit file link and after you've accepted the Licensing Agreement, verify you have downloaded the Modero Kit file to a known location.
7. From within Studio, select **Tools > Firmware Transfers > Send to NetLinx Device** from the Main menu to open the Send to NetLinx Device dialog (**B** in FIG. 95). Verify the panel's System and Device number values match those values listed within the System folder in the **OnLine Tree** tab of the Workspace window (**A** in FIG. 95).

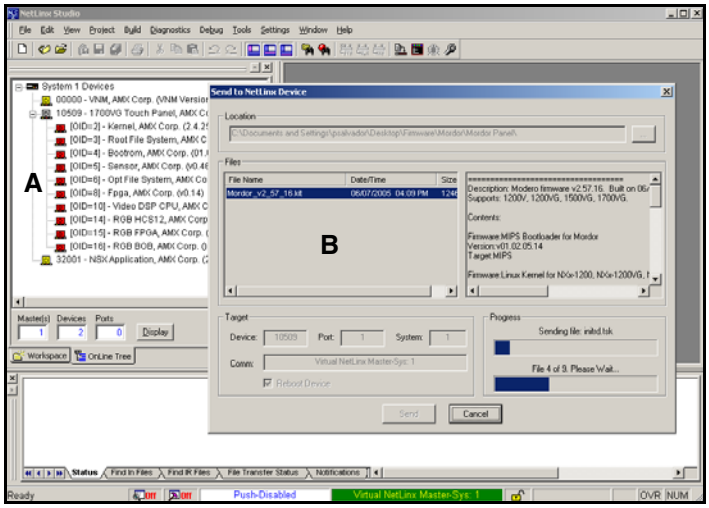

FIG. 95 Using USB for a Virtual Master transfer

8. Select the panel's KIT file from the **Files** section.
9. Enter the **Device** value associated with the panel and the **System** number associated with the Master (*listed in the OnLine Tree tab of the Workspace window*). *The Port field is greyed-out.*
10. Click the **Reboot Device** checkbox. This causes the touch panel to reboot after the firmware update process is complete. *The reboot of the panel can take up 30 seconds after the firmware process has finished.*
11. Click **Send** to begin the transfer. The file transfer progress is indicated on the bottom-right of the dialog (**B** in FIG. 95).
12. As the panel is rebooting, temporarily unplug the USB connector on the panel until the panel has completely restarted.
13. Reconnect the USB connector to the panel.
14. Right-click the associated System number and select **Refresh System**. This causes a refresh of all project systems, establishes a new connection to the Master, and populates the System list with devices on your particular system.
15. Confirm the panel has been properly updated to the correct firmware version.

Upgrading the Modero Firmware via an IP Address

Before beginning with this section, verify that your panel is powered and connected to the NetLinx Master through an Ethernet connection (direct or wireless).

Step 1: Prepare the Master for communication via an IP

1. Obtain the IP Address of the NetLinx Master from your System Administrator. If you do not have an IP Address for the Master, refer to your particular Master's instruction manual for more information on obtaining this IP Address using NetLinx Studio 2.
   - From the **Online Tree** tab of the Workspace window, select the NetLinx Master.
   - Follow steps outlined in either the *Obtaining or Assigning the Master's IP Address* sections from your particular NetLinx Master instruction manual to use an address.
   - Note the IP Address and Gateway information.
2. Launch NetLinx Studio 2.x (default location is **Start > Programs > AMX Control Disc > NetLinx Studio 2 > NetLinx Studio 2**).
3. Select **Settings > Master Communication Settings** from the Main menu to open the Master Communication Settings dialog (FIG. 96).

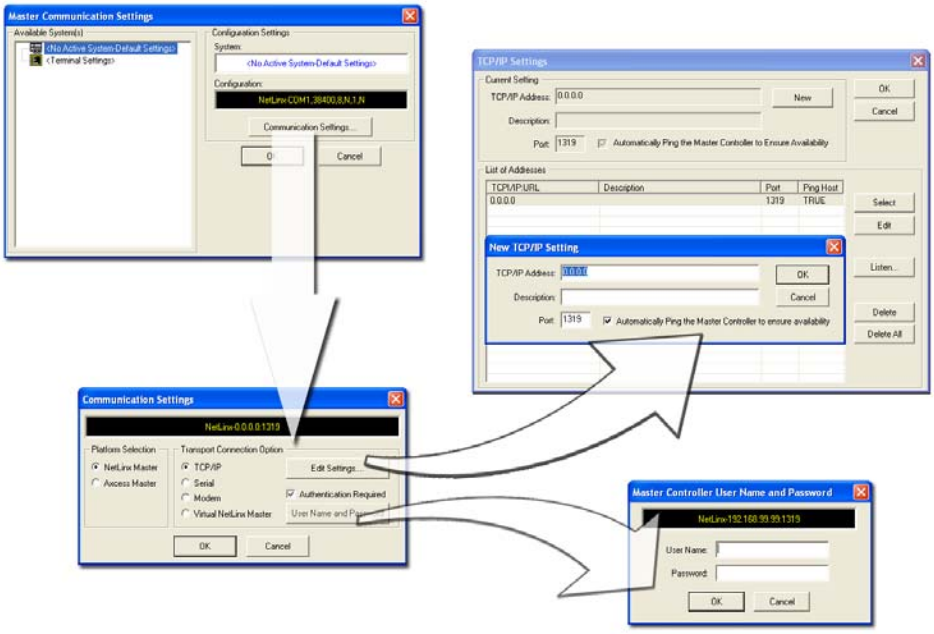

FIG. 96 Assigning Master Communication Settings and TCP/IP Settings

4. Click the **Communications Settings** button to open the Communications Settings dialog.
5. Click on the **NetLinx Master** radio button (*from the Platform Selection section*) to indicate you are working with a NetLinx Master (such as the NXC-ME260/64 or NI-Series of Integrated Controllers).
6. Click on the **TCP/IP** radio button (*from the Transport Connection Option section*) to indicate you are connecting to the Master through an IP Address.
7. Click the **Edit Settings** button (*on the Communications Settings dialog*) to open the TCP/IP Settings dialog (FIG. 96). This dialog contains a series of previously entered IP Address/URLs and their associated names, all of which are stored within Studio and are user-editable.

8. Click the **New** button to open the New TCP/IP Settings dialog where you can enter both a previously obtained DHCP or Static IP Address and an associated description for the connection into their respective fields.
9. Place a checkmark within the *Automatically Ping the Master Controller to ensure availability* radio box to make sure the Master is initially responding online before establishing full communication.
10. Click **OK** to close the current New TCP/IP Settings dialog and return to the previous TCP/IP Settings dialog where you must locate your new entry within the List of Addresses section.
11. Click the **Select** button to make that the currently used IP Address communication parameter.
12. Click **OK** to return to the Communications Settings dialog and place a checkmark within the *Authentication Required* radio box if your Master has been previously secured with a username/password.
13. Click on the **Authentication Required** radio box (if the Master is secured) and then press the **User Name and Password** button to open the Master Controller User Name and Password dialog.
14. Within this dialog, you must enter a previously configured username and password (with sufficient rights) before being able to successfully connect to the Master.
15. Click **OK** to save your newly entered information and return to the previous Communication Settings dialog where you must click **OK** again to begin the communication process to your Master.

NOTE

If you are currently connected to the assigned Master, a popup asks whether you would want to temporarily stop communication to the Master and apply the new settings.

16. Click **Yes** to interrupt the current communication from the Master and apply the new settings.
17. Click **Reboot** (*from the Tools > Reboot the Master Controller dialog*) and wait for the System Master to reboot. *The STATUS and OUTPUT LEDs should begin to alternately blink during the incorporation. Wait until the STATUS LED is the only LED to blink.*
18. Press **Done** once until the *Master Reboot Status* field reads **Reboot of System Complete**.
19. Click the **OnLine Tree** tab in the Workspace window to view the devices on the System. *The default System value is one (1).*
20. Right-click the associated System number and select **Refresh System**. This establishes a new connection to the specified System and populates the list with devices on that system. *The communication method is then highlighted in green on the bottom of the NetLinx Studio window.*

Step 2: Prepare the panel for communication via an IP

1. Press the blue *Type* field (*from the Master Connection section*) until the choice cycles to the word **Ethernet**.
2. Press the blue *Mode* field until the choice cycles to the word **URL**.
   - By selecting **URL**, the System Number field becomes read-only (grey) because the panel pulls this value directly from the communicating target Master (virtual or not). A Virtual Master system value can be set within the active AMX software applications such as: NetLinx Studio, TPD4, or IREdit.
3. Press the red *Master IP/URL* field to open a Keyboard and enter the NetLinx Master's IP Address **(obtained from the Diagnostics - Networking Address dialog of the NetLinx Studio application)**.
4. Click **Done** to accept the new value and return to the System Configuration page.
5. Do not alter the Master Port Number value (*this is the default value used by NetLinx*).

6. Press the **Back** button to return to the Protected Setup page and press the on-screen **Reboot** button to restart the panel and save any changes.

Step 3: Verify and Upgrade the panel firmware via an IP

1. Click the **OnLine Tree** tab in the Workspace window to view the devices on the System. *The default System value is one.*
2. Right-click the associated System number (from the Workspace window) and select **Refresh System** to detect of all devices on the current system, establish a new connection to the Master, and refresh the System list with devices on that system.
3. After the Communication Verification dialog window verifies active communication between the PC and the Master, verify the panel appears in the **OnLine Tree** tab of the Workspace window (FIG. 97). *The default Modero panel value is 10001.*

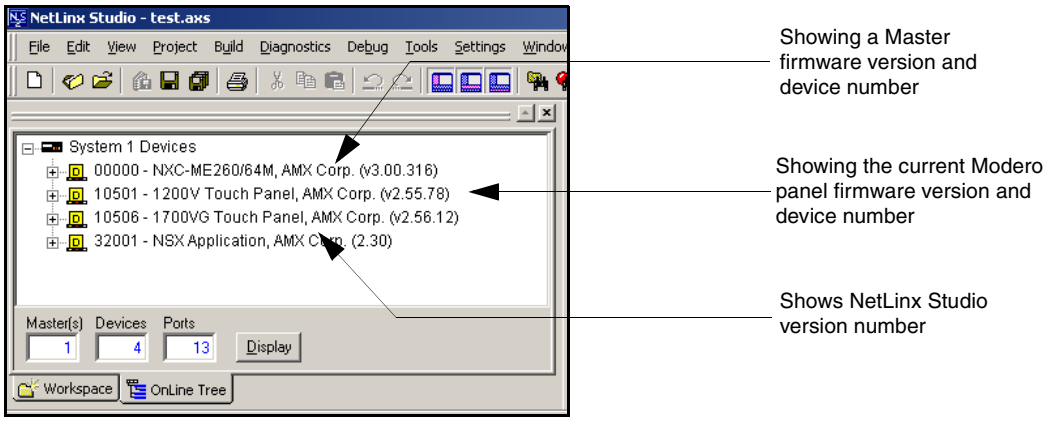

FIG. 97 NetLinx Workspace window (showing connected Modero panel)

NOTE

The panel firmware is shown on the right of the listed panel.

4. If the panel firmware being used is not current, download the latest Kit file by first logging in to **www.amx.com** and then navigate to **Tech Center > Firmware Files** and from within the **Modero** section of the web page locate your Modero panel.
5. Click on the desired Kit file link and after you've accepted the Licensing Agreement, verify you have downloaded the Modero Kit file to a known location.
6. From within Studio, select **Tools > Firmware Transfers > Send to NetLinx Device** from the Main menu to open the Send to NetLinx Device dialog (FIG. 98). Verify the panel's System and Device number values match those values listed within the System folder in the **OnLine Tree** tab of the Workspace window.
7. Select the panel's KIT file from the **Files** section (FIG. 98).
8. Enter the **Device** value associated with the panel and the **System** number associated with the Master (*listed in the OnLine Tree tab of the Workspace window*). *The Port field is greyed-out.*
9. Click the **Reboot Device** checkbox. This causes the touch panel to reboot after the firmware update process is complete. *The reboot of the panel can take up 30 seconds after the firmware process has finished.*
10. Click **Send** to begin the transfer. The file transfer progress is indicated on the bottom-right of the dialog (FIG. 98).

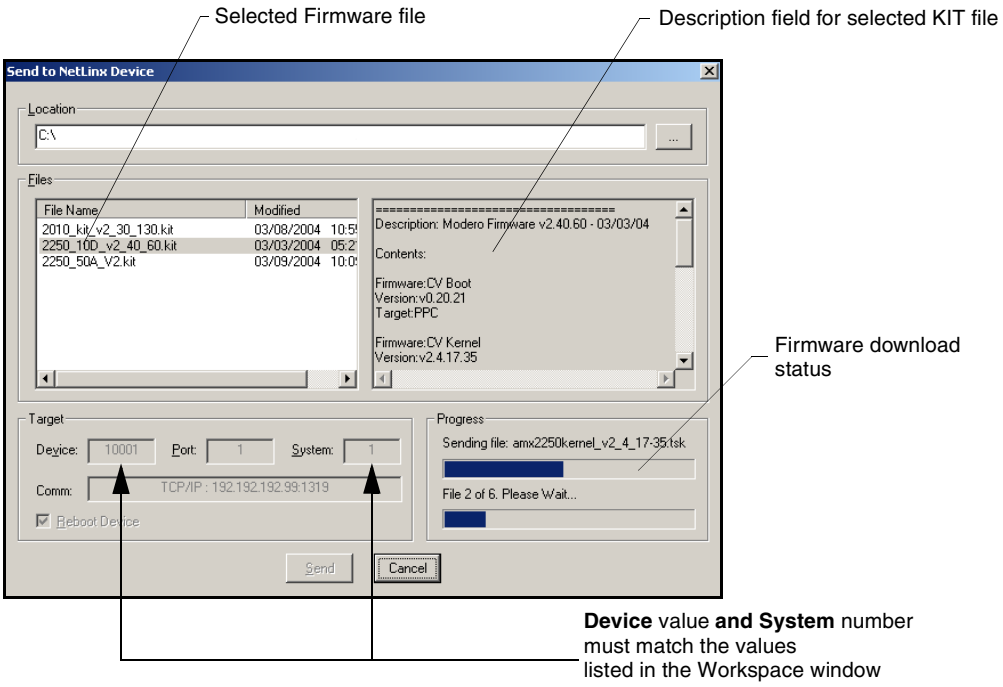

FIG. 98 Send to NetLinx Device dialog (showing Modero firmware update via IP)

11. Click **Close** (*after the panel reboots*) to return to the main program.
12. Right-click the associated System number and select **Refresh System**. This causes a refresh of all project systems, establishes a new connection to the Master, and populates the System list with devices on your particular system.

Upgrading Accessory Devices via an IP Address

The following accessory devices are firmware upgradeable:

- NXA-BASE/B Battery Base (**FG2255-10**)
- NXA-RGB card (**FG2260**)
- NXA-AVB/RGB Breakout Box (**FG2254-11**)

These devices are not given a unique device numbers which would ordinarily appear within the Online Tree tab of NetLinx Studio. They appear below the target which they are either communicating with (NXA-AVB/RGB) or a part of (NXA-BASE/B or NXA-RGB card) as seen below in FIG. 99.

The only way to upgrade the firmware of an accessory item is to send the accessory's firmware through a target panel. Its this panel's device number which is entered within the *Send to NetLinx Device transfer* dialog in Studio.

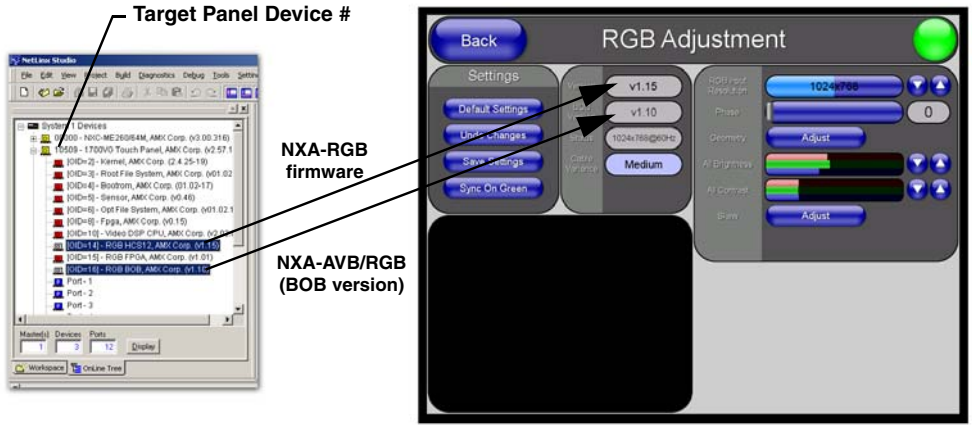

FIG. 99 Location of Firmware version information within NetLinx Studio

NOTE

Firmware can also be downloaded to accessory items via a direct USB connection using the PC as a Virtual Master (Upgrading the Modero Firmware via the USB port section on page 121*). In this case, you will still need to know the System and Device Number information of the target panel. For a more detailed description of how to setup this type of connection, refer to the Configuring and Using USB with a Virtual Master* section on page 95*.*

Step 1: Prepare the NXA-BASE/B for firmware transfer

Before beginning with this section:

- Unplug any connectors from the rear of the NXT panel (power, Ethernet, etc.).
- Refer to the *Installing the NXA-BASE/B to an NXT Modero Panel* section on page 46 for installation procedures to mount the NXT atop the battery base.

WARNING

DO NOT PLACE BATTERIES IN THE BASE BEFORE CONNECTING IT TO THE NXT PANEL*. Insert batteries into the NXA-BASE/B* ***ONLY AFTER*** *the base has been installed onto the bottom of the NXT panel.*
Having batteries in the base before connection can damage the battery base.

- Verify your NXA-BASE/B is securely attached to the bottom of the NXT panel.
- Once the base is secured, side out the battery compartment and install the batteries into the battery base. Once the batteries are installed, close the compartment.
- Reconnect all rear connectors to the NXT panel.

1. Complete the instructions for configuring the NetLinx Master for IP communication found in the *Step 1: Prepare the Master for communication via an IP* section on page 125.
2. Press the grey Front Setup Access button for **3 seconds** to open the Setup page.
3. Press the **Battery Base** button to open the Battery Base page (FIG. 100).

FIG. 100 Battery Base page

NOTE

*The battery base firmware is shown on the right of the Battery Base page. Verify you have downloaded the latest firmware file from **www.amx.com** and then save the KIT file to your computer.*

Step 2: Upgrade the NXA-BASE/B firmware via an IP

1. Click on the **OnLine Tree** tab in the Workspace window to view the devices on the System. *The default System value is one*.
2. Right-click the associated System number (from the Workspace) and select **Refresh System** to detect of all devices on the current system, establish a new connection to the Master, and refresh the System list with devices on that system.
3. After the Communication Verification dialog window verifies active communication between the PC and the Master, verify the target panel appears in the **OnLine Tree** tab of the Workspace window. *The default Modero panel value is 10001. The NXA-BASE/B will not appear on the system listing.*
4. Locate the latest Kit file by first logging in to **www.amx.com** and then navigate to **Tech Center > Firmware Files** and from within the **Modero** section of the web page locate the **Modero Battery Base** section of the website.
5. Click on the desired Kit file link and after you've accepted the Licensing Agreement, verify you have downloaded the Modero Battery Base Kit file to a known location.
6. From within Studio, select **Tools > Firmware Transfers > Send to NetLinx Device** from the Main menu to open the Send to NetLinx Device dialog (FIG. 101). Verify the panel's System and Device number values match those values listed within the System folder in the **OnLine Tree** tab of the Workspace window.
7. Select the battery base's KIT file (*ending in VXX.kit*) from the **Files** section (FIG. 101).
8. Enter the **Device** value associated with the panel and the **System** number associated with the Master (*listed in the OnLine Tree tab of the Workspace window*). *The Port field is greyed-out.*

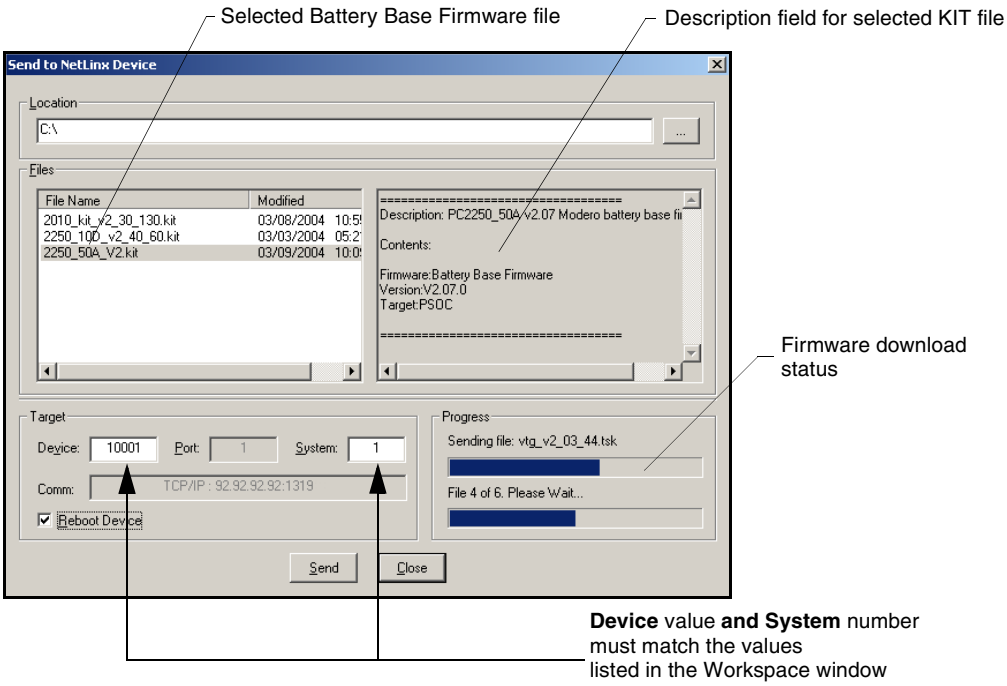

FIG. 101 Send to NetLinx Device dialog (showing NXA-BASE/B firmware update via IP)

NOTE

The firmware for the battery base can not be downloaded directly. Download of the KIT file to the BASE/B is done through the panel. The procedures for updating firmware to the base are nearly identical to those for updating panel firmware, except that the KIT file selected must be that of the BASE/B.

9. Click the **Reboot Device** checkbox. This causes the touch panel to reboot after the firmware update process is complete. *The reboot of the panel can take up 30 seconds after the firmware process has finished.*
10. Click **Send** to begin the transfer. The file transfer progress is indicated on the bottom-right of the dialog (FIG. 101).
11. Click **Close** on the Send to NetLinx dialog window (*after the panel reboots*) to return to the main program.
12. Right-click the associated System number and select **Refresh System**. This causes a refresh of all project systems, establishes a new connection to the Master, and populates the System list with devices on your particular system.
13. Press and hold the grey Front Setup Access button (below the LCD) for 3 seconds to access the Setup page.
14. Press the **Battery Base** button to open the Battery Base page and confirm that the version is no longer 0.00.

NOTE

If the Base Version field displays 0.00, this means there was an error in the firmware download process. Re-install the base firmware and re-confirm that the new base version no longer reads 0.00.

Upgrading the NXA-RGB and NXA-AVB/RGB Firmware

1. Identify the Device number of the target panel being used for firmware routing to the accessories.
2. Complete the instructions for configuring the NetLinx Master for IP communication found in the *Step 1: Prepare the Master for communication via an IP* section on page 125.
3. Press the grey Front Setup Access button for **3 seconds** to open the Setup page.
4. Press the **Video Adjustment** > **RGB Adjustment** buttons to open the RGB Adjustment page (FIG. 102). This page displays the firmware for both the internal NXA-RGB card and the communicating external NXA-AVB/RGB Breakout Box (BOB).

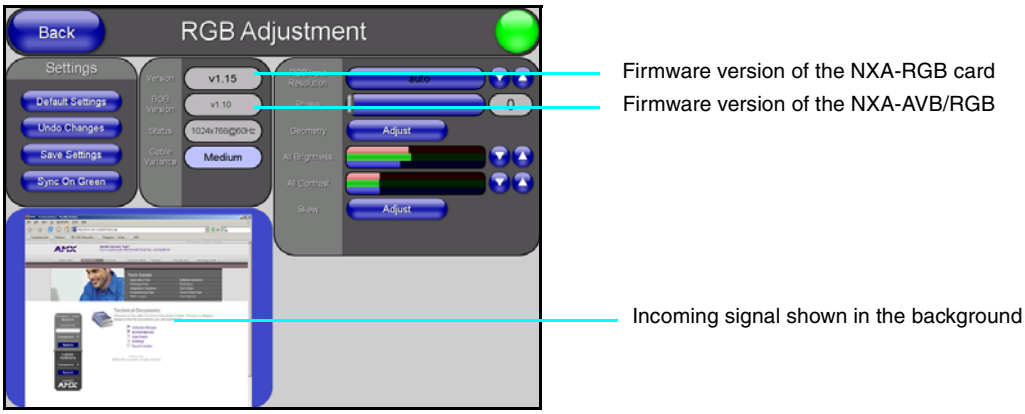

FIG. 102 RGB Adjustment page (showing the default values)

5. Follow the procedures outlined within the *Step 2: Upgrade the NXA-BASE/B firmware via an IP* section on page 130.

NOTE

If firmware is updated to either the panel or the breakout box, both units must be power-cycled for the panel to detect and display the new BOB firmware version.

Firmware Pages and Descriptions

Overview

This section describes each firmware page and their specific functional elements.

Setup Navigation Buttons

The Setup Navigation Buttons (FIG. 103) appear on-screen when the Setup page is active.

FIG. 103 Setup Navigation Buttons

These Navigation Buttons are specific to these Modero panels and include the specific elements described in the following table:

Setup Navigation Button Elements	
Project Information:	Press the Project Information button to access the Project Information and view the TPD4 project file properties currently loaded on the selected panel ***(read-only).*** • Refer to the *Project Information Page* section on page 136 for more detailed information.
Panel Information:	Press the Panel Information button to access the Panel Information page and view panel specific information such as resolution, memory, etc. ***(read-only).*** • Refer to the *Panel Information Page* section on page 137 for more detailed information.
Time Adjustment:	Press the Time Adjustment button to access the Time Adjustment page where you can alter the time and date settings on the Master. • Refer to the *Time & Date Setup Page* section on page 138 for more detailed information.
Audio Adjustments:	Press the Audio Adjustments button to access the Volume page where you can alter the audio parameters on the Modero panel. • Refer to the *Volume Page* section on page 139 for more detailed information.
Protected Setup:	Press the Protected Setup button to access the Protected Setup page section that provides access to the panel's sensors, calibration features, and connection settings. • Refer to the *Protected Setup Navigation Buttons* section on page 153 and *Protected Setup Page* section on page 154 for more detailed information.

Setup Navigation Button Elements (Cont.)	
Video Adjustment:	Press the Video Adjustment button to access the Video Adjustment page where you can set the video properties for incoming video. • This button only appears on Color Video (CV) capable touch panels. • Refer to the *Video Adjustment - Video Adjustment Page* section on page 141 for more detailed information.
Battery Base:	Press the Battery Base button to access the Battery Base page where you can modify and monitor NXT-BP Modero Power Pack parameters. • This button only appears when a Modero Table Top panel (NXT) is connected to an NXA-BASE/B battery base. • Refer to the *Battery Base Page* section on page 151 for more detailed information.

Setup Page

This page (FIG. 104) centers around basic Modero panel properties such as: Connection Status of the panel, Display Timeout, Inactivity Page Flip Time, Inactivity page file, and the Panel Brightness.

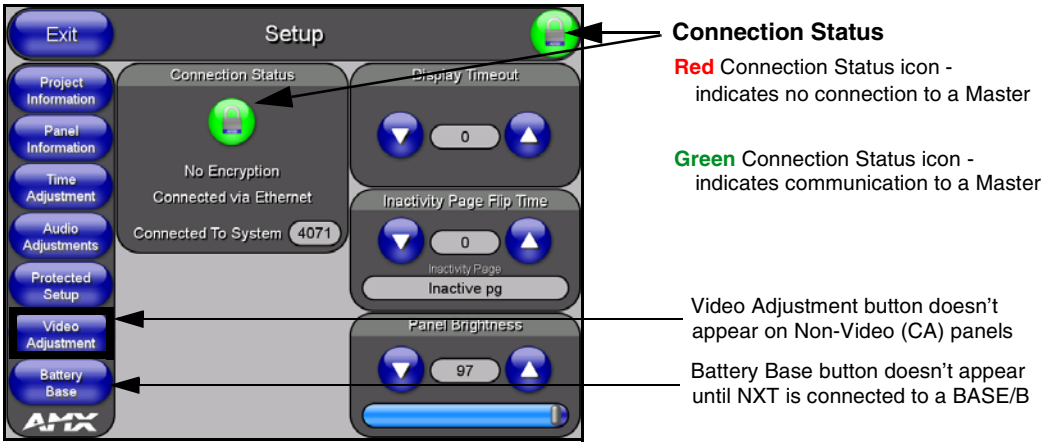

FIG. 104 Setup page

The elements of the Setup page are described in the table below:

Setup Page Elements	
Exit:	Returns you to the Main touch panel page. In this case, the previous page is the default Main page.
Connection Status icon:	This visual display of the connection status allows the user to have a current update of the panel's connection status regardless of what page is currently active. • A Lock only appears on the icon if the panel has established a connection with a currently secured target Master (*requiring a username and password*).

Setup Page Elements (Cont.)	
Connection Status:	Displays whether the panel is communicating externally, the encryption status of the communicating Master, what connection type is being used (*Ethernet or USB*), and what System the panel is a part of. This visual display of the connection status is also reflected at the upper-right of each firmware page. This allows the user to have a current visual update of the panel's connection status regardless of what page is currently active. • When a connection is established, the message displayed is either: "*Connected via Ethernet* " or "*Connected via USB* ". • If no connection can be established by the Modero panel, it will continue to try and establish a connection while displaying: "*Attempting via ...*". • The word "*Encrypted*" appears only when an encrypted connection is established with a target Master. • The panel must be rebooted before incorporating any panel communication changes and detecting any active Ethernet connections. ***The Ethernet connection is not detected until after a reboot.***
Display/Panel Timeout:	Sets the length of time the panel can remain idle before activating the sleep mode. When the device goes into sleep mode, the LCD is powered-down. • Press the UP/DN buttons to increase/decrease the time until the panel times out. Range = 0 - 240 minutes. • Use this button to set the timeout value to zero and disable the sleep mode. • Note: Display timeout values affect battery performance. Small timeout values increase the life of the battery charge. Greater timeout values may require more frequent battery charging.
Inactivity Page Flip Timeout:	Sets the number of minutes of inactivity before the panel automatically flips to a pre-selected touch panel page. When the device goes into this inactivity mode, the LCD does not power-down. • Press the UP/DN buttons to increase/decrease the time the panel can remain inactive before it flips to the preset page. Range = 0 - 240 minutes. • Use this button to set the timeout value to zero and disable the inactivity page flip mode. • The touch panel page used for the Inactivity page flip is shown within a small Inactivity Page field.
Panel Brightness:	Sets the display brightness level of the panel. • Press the UP/DN buttons to adjust the brightness level. Range = 0 - 100. • The on-screen bargraph can be dragged to adjust the Brightness level which is then reflected as a corresponding numeric value within the *Panel Brightness* field.

Project Information Page

The Project Information page displays the TPDesign4 (TPD4) project file properties currently loaded on the selected Modero panel (FIG. 105). Refer to the *TPDesign4 Touch Panel Program* instruction manual for more specific information on uploading TPDesign4 files to a panel.

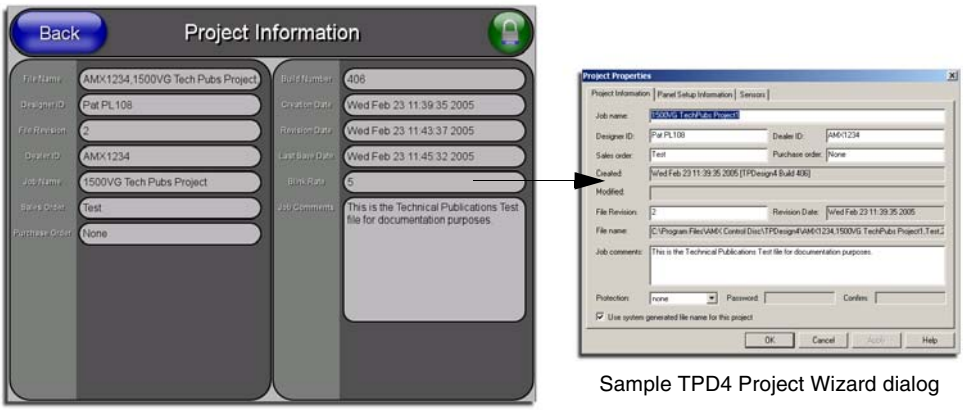

FIG. 105 Project Information page (shown taking information form TPD4 project file)

The elements of the Project Information page are described in the table below:

Project Information Page Elements	
Back:	Returns you to the previously active touch panel page.
Connection Status icon:	This visual display of the connection status allows the user to have a current visual update of the panel's connection status regardless of what page is currently active. • A Lock only appears on the icon if the panel has established a connection with a currently secured target Master (*requiring a username and password*).
File Name:	Displays the name of the TPDesign4 project file downloaded to the panel.
Designer ID:	Displays the designer information.
File Revision:	Displays the revision number of the file.
Dealer ID:	Displays the dealer ID number (*unique to every dealer and entered in TPD4*).
Job Name:	Displays the job name.
Sales Order:	Displays the sales order information.
Purchase Order:	Displays the purchase order information.
Build Number:	Displays the build number information of the TPD4 software used to create the project file.
Creation Date:	Displays the project creation date.
Revision Date:	Displays the last revision date for the project.
Last Save Date:	Displays the last date the project was saved.
Blink Rate:	Displays the feedback blink rate (10th of second).
Job Comments:	Displays any comments associated to the job. These comments are taken from the TPD4 project file.

Panel Information Page

The Panel Information page (FIG. 106) centers around Modero panel properties such as: resolution used, on-board memory, firmware, address/channel information, and string information.

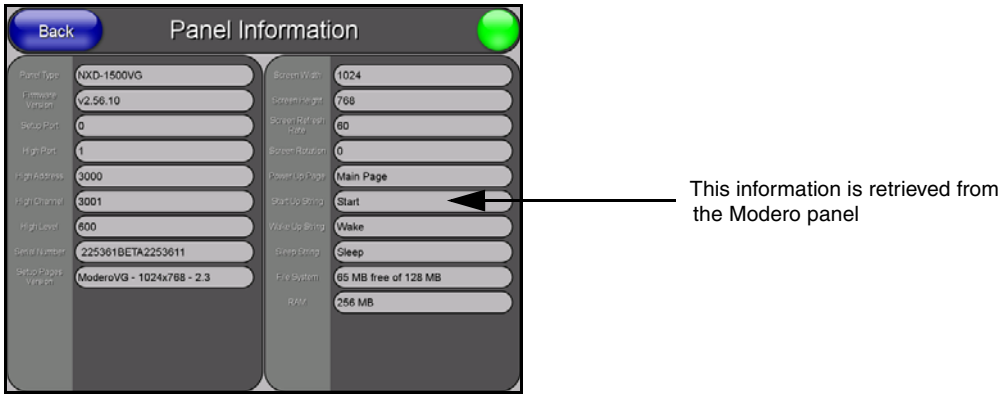

FIG. 106 Panel Information page (takes its' information from the touch panel)

The elements of the Panel Information page are described in the table below:

Panel Information Page Elements	
Back:	Returns you to the previously active touch panel page.
Connection Status icon:	This visual display of the connection status allows the user to have a current visual update of the panel's connection status regardless of what page is currently active. • A Lock only appears on the icon if the panel has established a connection with a currently secured target Master (*requiring a username and password*).
Panel Type:	Displays the model of the Modero panel being used.
Firmware Version:	Displays the G4 firmware version being used by the panel. • Verify you have the latest version from **www.amx.com**.
Setup Port:	Displays the setup port information/value being used by the panel.
High Port:	Displays the high port (port count) value for the panel.
High Address:	Displays the high address (address count) value for the panel.
High Channel:	Displays the high channel (channel count) value for the panel.
High Level:	Displays the high level (level count) value being used by the panel.
Serial Number:	Displays the specific serial number value assigned to the panel.
Setup Pages Version:	Displays the type and version of the Setup pages being used by the panel.
Screen Width:	Displays the pixel width being used to display the incoming video signal on the Modero panel. • Maximum available screen width on 12" panels is 800 pixels. • Maximum available screen width on 15" panels is 1024 pixels. • Maximum available screen width on 17" widescreen panels is 1280 pixels.
Screen Height:	Displays the pixel height being used to display the incoming video signal on the Modero panel. • Maximum available screen height on 12" panels is 600 pixels. • Maximum available screen height on 15" and 17" panels is 768 pixels.
Screen Refresh Rate:	Displays the video refresh rate applied to the incoming video signal from the panel.
Screen Rotation:	Displays the degree of rotation applied to the on-screen image.

Panel Information Page Elements (Cont.)	
Power Up Pages:	Displays the first touch panel page assigned for display after the device is powered-up. • This information is taken from the TPD4 project file. • Most projects begin with a Main page.
Start Up String:	Displays the start-up string.
Wake Up String:	Displays the wake up string used after an activation from a timeout.
Sleep String:	Displays the sleep string used during a panel's sleep mode.
File System:	Displays the amount of Compact Flash memory available on the Modero panel.
RAM:	Displays the available RAM (or Extended Memory module) on the Modero panel.

Time & Date Setup Page

The Time & Date Setup page (FIG. 107) allows you to alter/set the time and date information on the NetLinx Master. If either the Time/Date is modified on this page (*then updated to the Master by pressing the Set Time button*), all devices communicating to that target Master will then be updated to reflect the new information.

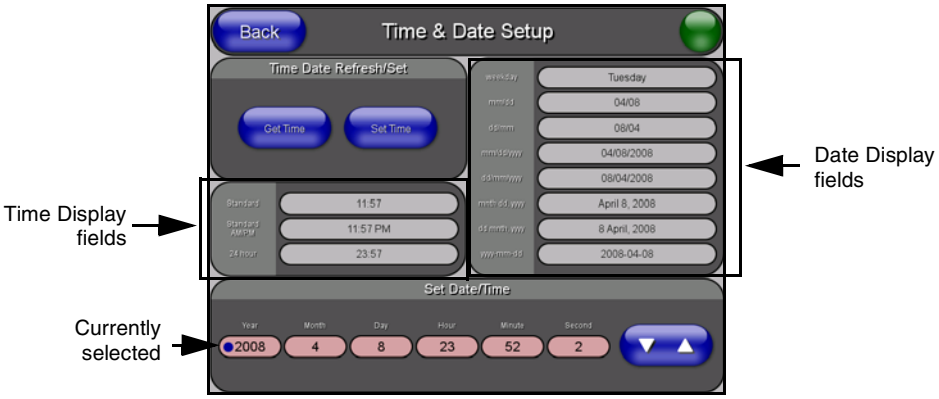

FIG. 107 Time and Date Setup page

NOTE

The only way to modify a panel's time, without altering the Master, is to use NetLinx Code.

The elements of the Time & Date Setup page are described in the table below:

Time & Date Setup Page Elements	
Back:	Returns you to the previously active touch panel page without saving changes (*to save changes, use the Set Time button*).
Connection Status icon:	This visual display of the connection status allows the user to have a current visual update of the panel's connection status regardless of what page is currently active. • A Lock only appears on the icon if the panel has established a connection with a currently secured target Master (*requiring a username and password*).
Time Date Refresh/Set:	This section provides you with two options: • The **Get Time/Date** button retrieves the Time and Date information from the Master. • The **Set Time/Date** button sets the Master to retain and save any time/date modifications made on the Time and Date Setup page.

Time & Date Setup Page Elements (Cont.)	
Time Display fields:	• These fields display the time in three formats: STANDARD, STANDARD AM/PM, and 24 HOUR.
Date Display fields:	• These fields display the calendar date information in several different formats.
Set Date/Time:	This section provides a user with both UP/DN arrow buttons to alter the Master's calendar date and time. The blue circle indicates which field is currently selected. • Select the **Year** field and use the UP/DN buttons to alter the year value (range = 2000 - 2037). • Select the **Month** field and use the UP/DN buttons to alter the month value (range = 1 - 12). • Select the **Day** field and use the UP/DN buttons to alter the day value (range = 1 - 31). • Select the **Hour** field and use the UP/DN buttons to alter the hour value (24-hour military). • Select the **Minute** field and use the UP/DN buttons to alter the minute value (range = 0 - 59). • Select the **Second** field and use the UP/DN buttons to alter the second value (range = 0 - 59).

NOTE

Modero touch panels do not have an on-board clock. This page both receives and sets the time/date of the NetLinx Master.

Volume Page

The Volume page (FIG. 108) (*accessed by pressing the Audio Adjustments button on the Setup page*) allows you to adjust the master volume parameters and default panel sounds on the panel.

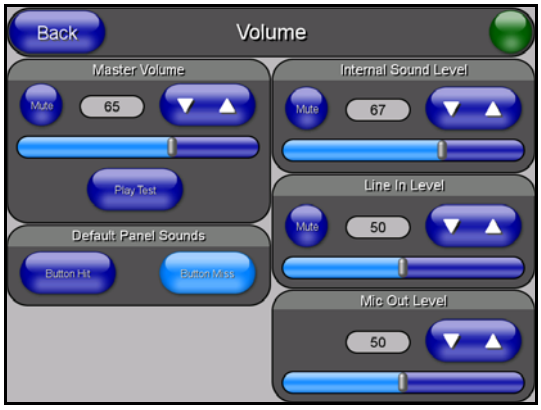

FIG. 108 Volume configuration page

The elements of the Volume page are described in the table below:

Volume Page Elements	
Back:	Saves the changes and returns you to the previously active touch panel page.
Connection Status icon:	This visual display of the connection status allows the user to have a current visual update of the panel's connection status regardless of what page is currently active. • A Lock only appears on the icon if the panel has established a connection with a currently secured target Master (*requiring a username and password*).

Volume Page Elements (Cont.)	
Master Volume:	This section allows you to alter the current master volume level: • Use the UP/DN buttons to adjust the volume level (range = 0 - 100). • The Master Volume bargraph indicates the current volume level. • The **Mute** button toggles the Mute feature. • The **Play Test** button plays a test WAV/MP3 file over the panel's internal speakers.
Default Panel Sounds:	Sets the Modero panel to play either the default **Button Hit** sound (when you touch an active button) and/or the default **Button Miss** sound (when you touch a non-active button or any area outside of the active button).
Internal Sound Level:	This section allows you to adjust the current sound level on the internal panel speaker: • Use the UP/DN buttons to adjust the volume output on the internal speakers (range = 0 - 100). • The Internal Sound Level bargraph indicates the current sound level. • The **Mute** button mutes the volume.
Line In Level:	Allows you to adjust the current Line-In volume level (being received from the communicating breakout box). • Use the UP/DN buttons to adjust the Line-In volume level (range = 0 - 100). • The Line-In Level bargraph indicates the current Line-In level. • The **Mute** button mutes the Line-In volume.
Mic Out Level:	Allows you to adjust the current Microphone volume level (being received from the communicating breakout box). • Use the UP/DN buttons to adjust the Microphone volume level (range = 0 - 100). • The Mic Out Level bargraph indicates the current Mic Out level.

Supported sampling rates for WAV

The following is a listing of supported sampling rates associated for WAV files played on these panels. Some WAV files currently played on Modero's may not work on these panels. The supported sampling rates for WAV files are:

Supported WAV Sampling Rates	
• 48000 Hz	• 16000 Hz
• 44100 Hz	• 12000 Hz
• 32000 Hz	• 11025 Hz
• 24000 Hz	• 8000 Hz
• 22050 Hz	

Protected Setup Page

This button opens the Protected Setup page which centers around the properties used by the panel to properly communicate with the NetLinx Master. Refer to both the *Protected Setup Navigation Buttons* section on page 153 and the *Protected Setup Page* section on page 154 for more detailed information.

Video Adjustment Slide-Out Option Bar

Pressing the on-screen Video Adjustment button causes an option bar to slide outwards from the Navigation buttons (FIG. 109). This option bar provides you with three choices: Video Adjustment, RGB Adjustment, and Streaming Adjustment. *Each of these options corresponds to an on-board slot position where the related components reside (as seen below)*. As an example: pass-thru can only be enabled via slot 2 because the information is routed through the NXA-RGB card residing in Slot 2 on the board. Refer to the following sections for detailed information on each option.

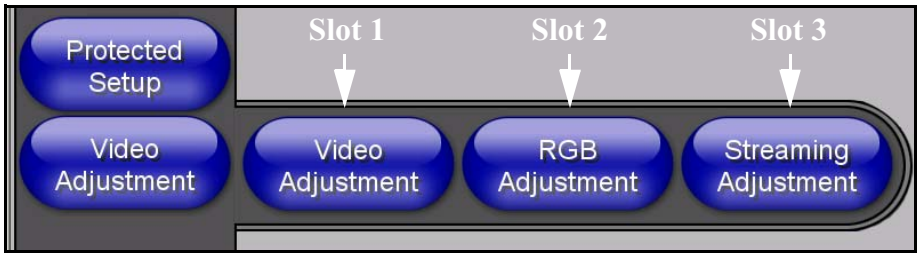

FIG. 109 Video Adjustment Slide-Out Options Bar

Video Adjustment - Video Adjustment Page

The Video Adjustment page (FIG. 110) (*accessed by pressing the Video Adjustment button on the Setup page and then selecting the appropriate button from the option bar*) sets the Video properties of the incoming video signal from an NXA-AVB/RGB Breakout Box.

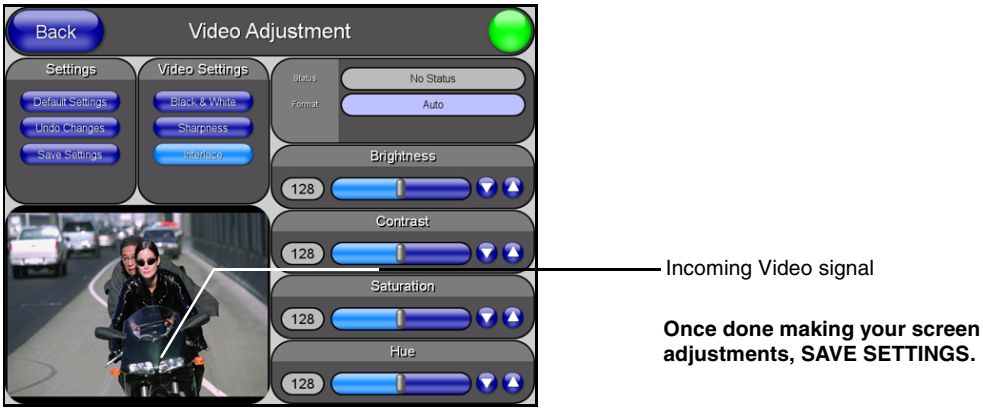

FIG. 110 Video Adjustment page (showing default values)

The elements of the Video Adjustment page are described in the table below:

Video Adjustment Page Elements	
Back:	Saves the changes and returns you to the previously active touch panel page.
Connection Status icon:	This visual display of the connection status allows the user to have a current visual update of the panel's connection status regardless of what page is currently active. • A Lock only appears on the icon if the panel has established a connection with a currently secured target Master (*requiring a username and password*).
Settings:	• The **Default Settings** button sets the video settings to their default values (indicated in this table). • The **Undo Changes** button disregards any changes made on the page since the last settings were saved. • The **Save Settings** button saves any changes made to this page.

Video Adjustment Page Elements (Cont.)	
Video Settings:	• The **Black & White** button toggles the Black & White display mode. Default = Off. • The **Sharpness** button toggles the Interpolate (Sharpness) feature. Default = On. • The **Interlace** button toggles the Interlacing feature. Default = On.
Status:	Displays whether or not a video-sync signal is detected.
Format:	Allows you to press this blue field and cycle through a choice of available video formats (**NTSC**, **PAL**, **SECAM**, or **Auto detect**). • Default = Auto.
Brightness:	Use the UP/DN buttons to alter the brightness level of the incoming signal. • Range = 0 - 255, default = 128.
Contrast:	Use the UP/DN buttons to alter the contrast level of the incoming signal. • Range = 0 - 255, default = 128.
Saturation:	Use the UP/DN buttons to alter the color saturation level of the incoming signal. • Range = 0 - 255, default = 128.
Hue:	Use the UP/DN buttons to alter the hue level of the incoming signal. • Range = 0 - 255, default = 128.

Video Adjustment - RGB Adjustment Page

The RGB Adjustment page (FIG. 111) (*accessed by pressing the Video Adjustment button on the Setup page and then selecting the appropriate button from the option bar*) sets the RGB properties for the detected NXA-RGB card located within the target panel on Slot 2 where pass-thru occurs.

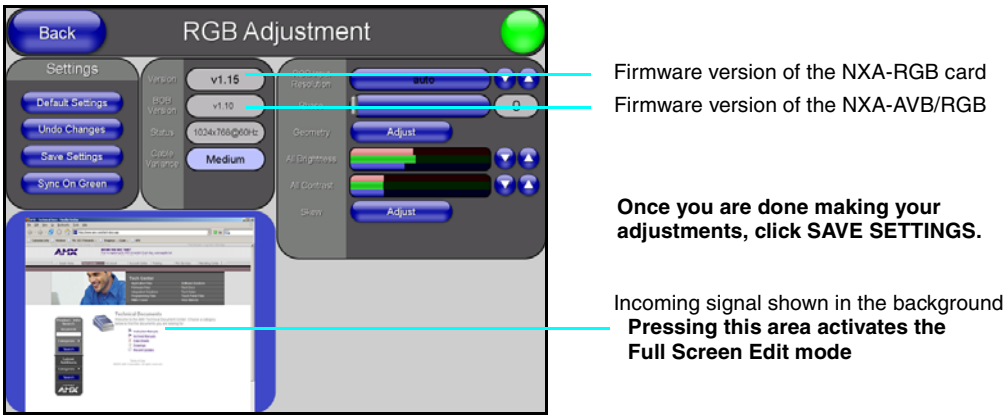

FIG. 111 RGB Adjustment page (showing the default values)

The elements of the RGB Setup page are described in the table below:

RGB Adjustment Page Elements	
Back:	Saves the changes and returns you to the previously active touch panel page.
Connection Status icon:	This visual display of the connection status allows the user to have a current visual update of the panel's connection status regardless of what page is currently active. • A Lock only appears on the icon if the panel has established a connection with a currently secured target Master (*requiring a username and password*).

RGB Adjustment Page Elements (Cont.)	
Settings:	• The **Default Settings** button sets the RGB settings to their default values (indicated in this table). • The **Undo Changes** button disregards any changes made on the page since the last settings were saved. • The **Save Settings** button saves any changes made to the RGB Adjustment page. • The **Sync on Green** button sets the NXA-RGB card to search for the sync signal on Green signal.
Version:	Displays the firmware version being used by the internal NXA-RGB card.
BOB Version:	Displays the firmware version of the communicating NXA-AVB/RGB Breakout Box. • If firmware is updated to either the panel or the breakout box, both units must be power-cycled for the panel to detect and display the BOB firmware version.
Status:	Displays the input signal properties of the signal routed through the internal NXA-RGB card (H-pixel x V-pixel @ Hz). An example is: 1024x768@85Hz.
Cable Variance:	Allows you cycle through a choice of available cable compensation parameters (**Short**, **Medium,** and **Long**). • This field adjusts the cable compensation for any signal degradation over a selected cable length. • This adjustment is done by using preset calculations to take into account the length and type of cable being used to transmit the signal. • Toggling the field can correct some signal problems.
RGB Input Resolution:	Use the UP/DN buttons to alter the input resolution of the RGB signal being routed through the internal NXA-RGB card. • Supported Input resolutions are: - **Auto**: automatically detects the incoming signal. ***This is the recommended setting and should be used as the default selection.*** - 560 x 192, 560 x 384, 640 x 350, 640 x 416, 640 x 480, 720 x 532, 800 x 600, 900 x 720, 1024 x 768, 1280 x 768, 1280 x 800, 1152 x 864, 1280 x 1024, 1600 x 1200, HD 480p, HD, 720p, and HD 1080i. • ***Note***: These displayed resolutions correspond to the supported input resolution of the NXA-RGB card. • ***Note: When using 1024 x 768, 1280 x 768, or 1280 x 800 it is recommended that you select those specific resolutions using the input adjustment UP/DN buttons.***
Phase:	Use either the slider or the UP/DN buttons to alter the RGB tracking/signal level. • Range = 0 - 31, default = 0.
Geometry:	Provides an on-screen RGB Geometry popup dialog that allows you to select from several location and size adjustment settings. • Press the **Adjust** button to open the RGB Geometry popup dialog. • Use the **Hide** button to close the popup. • Range = 0 - 255, default = 0.
H Position	Use the UP/DN buttons to alter the horizontal position level. • Range = 0 - 255, default = 0.
H Size	Use the UP/DN buttons to alter the horizontal size level. • Range = 0 - 255, default = 0.
V Position	Use the UP/DN buttons to alter the vertical position level. • Range = 0 - 255, default = 0.

RGB Adjustment Page Elements (Cont.)	
All Brightness:	Provides an on-screen RGB Brightness popup dialog that allows you to select from several brightness level adjustment settings.*The bargraph only serves to give the user a visual indication of the individual brightness levels and launch the RGB Brightness popup dialog.* Use the UP/DN buttons to alter the overall RGB brightness levels of the NXA-RGB card. • Press the **All Brightness** bargraph to open the RGB Brightness popup dialog. • Use the **Hide** button to close the popup. • Range = 0 - 255.
Red Brightness	Use the slider bar to alter the brightness of the red color value. • Range = 0 - 255, default = 115. • For more accurate control, you will have to go into the Full Screen Edit Mode described in the following section.
Green Brightness	Use the slider bar to alter the brightness of the green color value. • Range = 0 - 255, default = 120. • For more accurate control, you will have to go into the Full Screen Edit Mode described in the following section.
Blue Brightness	Use the slider bar to alter the brightness of the blue color value. • Range = 0 - 255, default = 100. • For more accurate control, you will have to go into the Full Screen Edit Mode described in the following section.
All Contrast:	Provides an on-screen RGB Contrast popup dialog that allows you to select from several contrast level adjustment settings. *The bargraph only serves to give the user a visual indication of the individual contrast levels and launch the RGB Contrast popup dialog.* Use the UP/DN buttons to alter the overall RGB contrast levels of the NXA-RGB card. • Press the **All Brightness** bargraph to open the RGB Brightness popup dialog. • Use the **Hide** button to close the popup. • Range = 0 - 255.
Red Contrast	Use the slider bar to alter the contrast of the red color value. • Range = 0 - 255, default = 60. • For more accurate control, you will have to go into the Full Screen Edit Mode described in the following section.
Green Contrast	Use the slider bar to alter the contrast of the green color value. • Range = 0 - 255, default = 60. • For more accurate control, you will have to go into the Full Screen Edit Mode described in the following section.
Blue Contrast	Use the slider bar to alter the contrast of the blue color value. • Range = 0 - 255, default = 60. • For more accurate control, you will have to go into the Full Screen Edit Mode described in the following section.

RGB Adjustment Page Elements (Cont.)	
Skew: *(not an issue if using a VideoTwist 7987 cable)*	The process of skewing involves applying a convergence control to the Red, Green, and Blue signal delivery through the terminal end of a cable. The skew value conforms to a nanosecond signal delay of the individual RGB signals. Different CAT5/6 cables use different materials and come in different cable lengths. Often, the terminal ends of these individual cable pairs are not always equal in length and can therefore result in the signal being delivered to the terminal end of the cable at a different time. This time can be a difference of a up to 30 nano-seconds @ 200ft, and that can be more than enough to cause the image to appear "off" or blurry. For this reason, AMX recommends using the Belden Brilliance VideoTwist 7987 cable. Although this cable is not CAT5 compliant, it is designed to control skew between the red, green, and blue video signals. Therefore, for longer cable runs, the video quality will be much higher if this cable is used. With other cables, the interplay between Cable Variance (cable length) and Skew Control must be taken into account when adjusting for image quality. Skew control provides an on-screen RGB Skew Adjustment popup dialog that allows you to select from several RGB specific signal delay (skew) adjustment settings. ***Note***: It is recommended that you be in the Full Screen Edit Mode when adjusting skew. • Press the **Adjust** button to open the RGB Skew Adjustment popup dialog. • Use the **Hide** button to close the popup. • Range = 0 - 63, default = 0. ***Note***: If you are using a cable run over 50 ft. (15.24 meters), this can cause the image's RGB colors to become misaligned and your image to appear blurry. The skew control then becomes a method or re-aligning the delivery times of the individual signals to the terminal NXA-RGB card.
Red skew	Use the UP/DN buttons to adjust the Red signal delay time (*in nano-seconds*). • Skew/Delay = 0 - 63, default = 0.
Green skew	Use the UP/DN buttons to adjust the Green signal delay time (*in nano-seconds*). • Skew/Delay = 0 - 63, default = 0.
Blue skew	Use the UP/DN buttons to adjust the Blue signal delay time (*in nano-seconds*). • Skew/Delay = 0 - 63, default = 0.
Full Screen Edit Mode:	Pressing the incoming signal area (FIG. 111) activates the Full Screen Edit mode. **The on-screen popup provides each field with UP/DN buttons to more accurately adjust the values for all of the above mentioned RGB parameter fields.** • This mode causes the incoming signal to be displayed at full screen and places an **RGB Adjustments** bar on the bottom of the screen. • Pressing the bar launches a draggable popup of the RGB adjustment section over the full screen image. • This popup allows you to view a full-screen version of the signal and alter it without having the image blocked by displaying only individual RGB adjustment dialog and specific RGB configuration pop-ups.

Adjusting the Incoming Signal on the RGB Adjustment Page

After opening the RGB Adjustment page, if the NXA-RGB is receiving an RGB signal, this signal is then displayed within the incoming signal area. By pressing within this area, you are provided with a more accurate method of altering the incoming RGB signal by viewing it at full-screen resolution and activating only specific RGB configuration pop-ups.

To adjust these properties:

1. Press the incoming signal area of the RGB Adjustments page to launch the Full Screen Edit mode, display the incoming image at full screen, and place a grey **RGB Adjustments** bar on the bottom of the screen.
2. Press this grey bar to maximize the RGB Adjustments popup menu (FIG. 112) which provides you with much more accurate adjustments of the incoming signal properties. This menu can be dragged across the screen for a better view of the underlying image. Once you exit this menu, the grey bar is positioned back onto its original location.

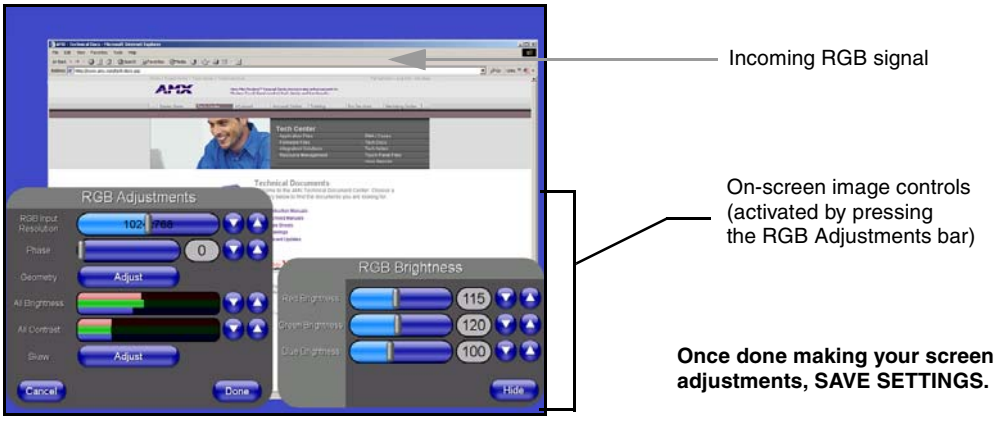

FIG. 112 Full Screen Edit Mode - showing controls

- Although these same options are available within the main RGB Adjustments page, these RGB image controls provide you with UP/DN arrows for accurate value entry adjustments. These controls allow you to set the RGB properties of the incoming image/video on the NXA-RGB.

NOTE

One of the first things to look at when trying to adjust your image, is the Phase value. Adjustments to this value can help troubleshoot most image issues.

3. Use the UP/DN **Phase** buttons to alter the RGB tracking/signal level of the incoming image/video. *These values cycle back thru 0 and on after reaching 31.*
4. Use the UP/DN **H Position** buttons (from the RGB Geometry popup dialog) to adjust the horizontal location and move the image (left-right) on the screen. *These values cycle back thru 0 and on after reaching 255.*
5. Use the UP/DN **H Size** buttons (from the RGB Geometry popup dialog) to adjust the horizontal height and stretch the image on the screen. *These values cycle back thru 0 and on after reaching 255.*
6. Use the UP/DN **V Position** buttons (from the RGB Geometry popup dialog) to adjust the vertical location and move the image (up-down) on the screen. *These values cycle back thru 0 and on after reaching 255.*
7. Use the UP/DN **Brightness** buttons (from the RGB Brightness popup dialog) to adjust either the overall or individual Red, Green, and Blue brightness of the incoming image/video. *The All Brightness bargraph gives a visual representation of the overall brightness level and cycles through an entire turn.*

8. Use the UP/DN **Contrast** buttons (from the RGB Contrast popup dialog) to adjust the overall or individual Red, Green, and Blue contrast of the incoming image/video. *Increasing the value can increase sharpness. This All Contrast bargraph gives a visual representation of the overall contrast level and cycles through an entire turn.*

9. To correct for a blurry image and adjust the Red, Green, and Blue signal skew it is recommended that:

   - Skew adjustments should be made at FULL SCREEN mode and use the panel's native resolution. In the case of a 1500VG panel (as seen above) that native resolution is 1024 x 768. Set the RGB Input Resolution value accordingly (done via the RGB Input Resolution slider).

   - Do your skew adjustment using an image which contains single pixel-wide white vertical lines (such as those seen in FIG. 113). This allows you to verify that your RGB signals are being received at the same time.
     - The lines in circle **A** of FIG. 113, show how all three signals are in sync and overlap to produce the single white line.
     - The lines is circle **B** of FIG. 113, show how the Red signal is being delivered with a slight delay and is "throwing off" the color of the line. Altering the Red Skew value can compensate for this delay and re-align the image.

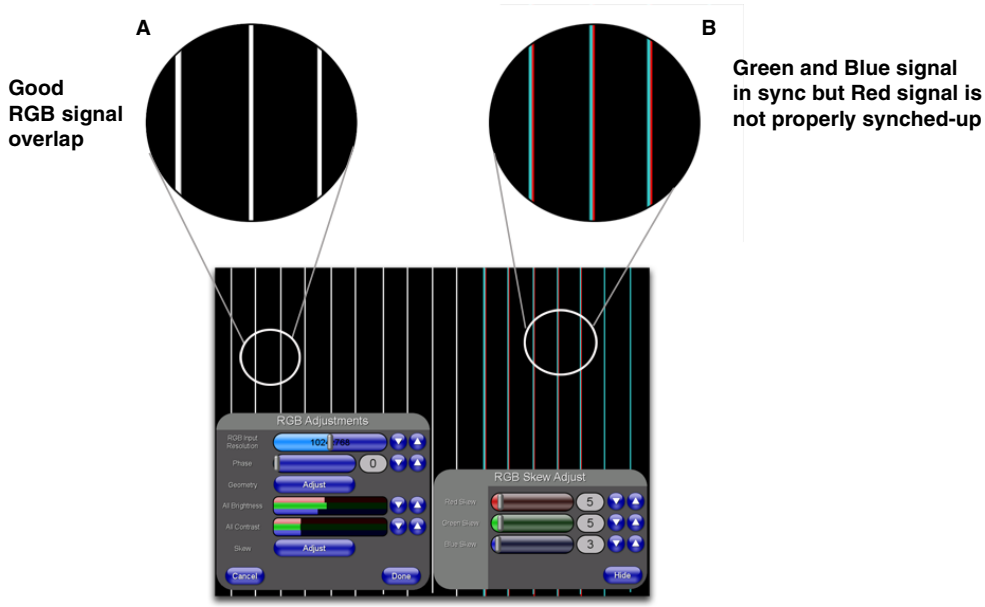

FIG. 113 Full Screen Edit Mode - showing skew adjustment scenario

10. Once done making these adjustments, press the **Done** button to temporarily save these modifications and place the grey **RGB Adjustments** bar back onto the bottom of the screen. Pressing the **Cancel** button returns you to the RGB Adjustments page without temporarily saving your changes.

11. Press anywhere on the background image to exit from the Full Screen Edit mode and return to the RGB Adjustment page.

12. In the RGB Adjustment Page, press the **Save Settings** button to save your changes to the NXA-RGB card. *Cycling power to the panel before saving your settings can cause your pages to shift back to their original locations.*

13. Press the **Back** button to return to the Setup page.

Video Adjustment - Streaming Adjustment Page

The Streaming Video Adjustment page (FIG. 110) (*accessed by pressing the Video Adjustment button on the Setup page and then selecting the appropriate button from the option bar*) adjusts the Video properties of the incoming MPEG video streaming from the external content server.

Refer to the *Displaying Stream Content* section on page 169 for the procedures used to configure the TPD4 touch panel pages and media stream source (*using MAX-CSE for example purposes*).

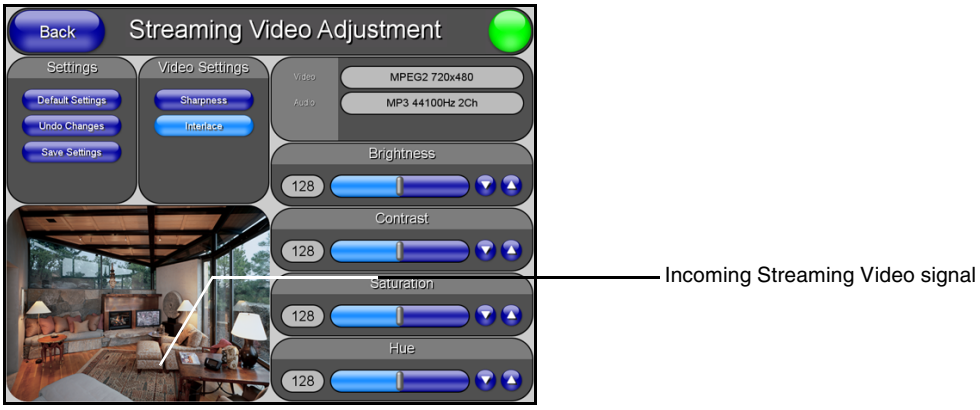

FIG. 114 Streaming Video Adjustment page (showing default values)

The elements of the Streaming Video Adjustment page are described in the table below:

Streaming Video Adjustment Page Elements	
Back:	Saves the changes and returns you to the previously active touch panel page.
Connection Status icon:	This visual display of the connection status allows the user to have a current visual update of the panel's connection status regardless of what page is currently active. • A Lock only appears on the icon if the panel has established a connection with a currently secured target Master (*requiring a username and password*).
Settings:	• The **Default Settings** button sets the streaming video settings to their default values (indicated in this table). • The **Undo Changes** button disregards any changes made on the page since the last settings were saved. • The **Save Settings** button saves any changes made to the Video Setup page.
Video Settings:	• The **Sharpness** button toggles the Interpolate (Sharpness) feature. Default = On. • The **Interlace** button toggles the Interlacing feature. Default = On.

Streaming Video Adjustment Page Elements (Cont.)	
Video:	This read-only field displays the video stream information (Video Streaming format and resolution). • The properties of this incoming (detected) stream is given as: **Video Codec** and **Resolution**. • An example would be: **MPEG2 720x480**. This means that the incoming video is an MPEG2 video stream with resolution 720x480.
Codec *(Short for* en**CO**der/ **DEC**oder or **CO**mpressor/ **DEC**ompressor)	• Supported MPEG codecs: **MPEG-2** or **MPEG-4** • *MPEG-2 is typically used to encode audio and video for broadcast quality signals. The MPEG-2 is enhanced by using MPEG-1's audio (MP2) component to allow the coding of audio programs with more than two channels. Video quality is noticeably higher with MPEG-2 vs MPEG-4.* • *MPEG-4 is currently used as a standard for the web (streaming media) and CD distribution, conversational (videophone), and broadcast television. The biggest difference between these two encoding types is that MPEG-4 uses about 1/3 to 1/2 less bandwidth for the same quality of video.*
Resolution	This relates to the display size/resolution used by the incoming video stream. • Available resolutions: **D1** (default) or **SIF**: • *D1 is a resolution standard. In the NTSC system, "Full D1" means 720x480 pixels @ 30 fps, and in PAL systems, full D1 is 720x576 @ 24 fps.* • *SIF (Source Interchange Format) is a resolution standard defined as 352x240 @ 30fps for NTSC and 352x288 @ 24 fps for PAL.*
Scaling	This is the ability of the Modero panel to scale the incoming NTSC or PAL video stream into the following pixel resolutions: • NTSC format: - 12" VG Modero panel: 360x240 (SIF),720x480 (D1), and 800x600 - 15" VG Modero panel: 1024x768 - 17" VG Modero panel: 1280x768 • PAL format: - 12" VG Modero panel: 360x288 (SIF),720x576 (D1), and 800x600 - 15" VG Modero panel: 1024x768 - 17" VG Modero panel: 1280x768

Streaming Video Adjustment Page Elements (Cont.)	
Audio:	This read-only field displays the audio streaming information (Audio Streaming format, sampling rate, and number of channels). • The properties of this incoming (detected) audio stream is given as: **Audio Codec, Sampling Rate,** and **Audio Channels**. • An example would be: **MP3 44100Hz 2Ch**. This means that the accompanying audio stream is using a 2 channel, MP3 audio stream with sampling rate of 44100 Hz.
Codec *(Short for* en**CO**der/ **DEC**oder or **CO**mpressor/ **DEC**ompressor)	Supported audio codecs: **AAC**, **MP2** or **MP3** • *AAC (Advanced Audio Coding) is a digital audio encoding and loss compression format. AAC was designed as an improved-performance codec relative to MP3 (which was specified in MPEG-1) and MPEG-2 Part 3 (which is also known as "MPEG-2 Audio" or ISO/IEC 13818-3).* • *MP2 (MPEG Audio Layer-2) is used as a file extension for files containing audio data of this type. It remains a dominant standard for audio broadcasting. This file type allows the coding of audio programs with more than two channels. The main difference between these two types is that MP2 audio files are generally larger than their MP3 counterparts and are mostly used with MPEG-2 video streams.* ***Note: MP2 is recommended for use with a high bandwidth video stream (ex: MPEG-4 or 6 Mbps - 3 Mbps).*** • *MP3 (MPEG Audio Layer-3) is a popular digital audio encoding and loss compression format. It was designed to greatly reduce the amount of data required to represent the original audio data, yet still sound like a faithful reproduction of the original uncompressed audio to most listeners.* ***Note: MP3 is recommended for use with a low bandwidth video stream (ex: MPEG-2 or < 3 Mbps).***
Sampling Rate	This is the sampling rate used by the incoming audio stream. • Sampling rate defines the number of samples per second taken from a continuous signal to make it a discrete signal. • Rate is measured in KHz (KiloHertz). • Available audio sampling rates: **32KHz**, **44.1KHz**, and **48KHz**. • Some of the common uses for these rates include: - **32,000 KHz** - miniDV digital video camcorder - **44,100 KHz** - compact disc, also most commonly used with MPEG-1 audio (VCD, SVCD, MP3) - **48,000 KHz** - digital sound used for digital TV, DVD, DAT, films and professional audio ***Note: Currently, 32KHz is not supported within the Modero firmware.***
Audio Channels	The number of audio channels encoded within the incoming audio stream. • Modero only supports 2CH (2 channel) audio.
Brightness:	Use the UP/DN buttons to alter the brightness level of the incoming signal. • Range = 0 - 255, default = 128.
Contrast:	Use the UP/DN buttons to alter the contrast level of the incoming signal. • Range = 0 - 255, default = 128.
Saturation:	Use the UP/DN buttons to alter the color saturation level of the incoming signal. • Range = 0 - 255, default = 128.
Hue:	Use the UP/DN buttons to alter the hue level of the incoming signal. • Range = 0 - 255, default = 128.

Refer to the *Displaying Stream Content* section on page 169 for the procedures used to configure the TPD4 touch panel pages and media stream source (*using MAX-CSE for example purposes*).

Battery Base Page

This page (FIG. 115) allows you to alter/set the power warning preferences, monitor battery status information, and alter the display times for the battery warnings. The fields on this page are populated with information after the panel is connected to an optional NXA-BASE/B Battery Base containing up to two NXT-BP batteries.

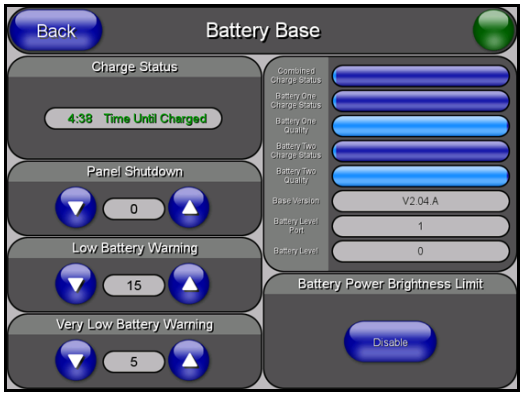

FIG. 115 Battery Base page

This page is ONLY available on Modero Table Top panels (NXT) using an NXA-BASE/B. The elements of the Battery Base page are described in the table below:

Battery Base Page Elements	
Back:	Saves the changes and returns you to the previously active touch panel page.
Connection Status icon:	This visual display of the connection status allows the user to have a current visual update of the panel's connection status regardless of what page is currently active. • A Lock only appears on the icon if the panel has established a connection with a currently secured target Master (*requiring a username and password*).
Charge Status:	**Time Remaining** (**blue**) indicates the amount of charge time (use) remaining on the batteries within the connected NXA-BASE/B. **Time Until Charged** (**green**) indicates the amount of time remaining until the batteries installed within the connected NXA-BASE/B are fully charged. • Range = 0:00 - 12:59. This is read in HH:MM, hours and minutes.
Panel Shutdown:	The **Panel Shutdown** UP/DN buttons alter the timeout value (in minutes). • This value determines the number of minutes that would need to pass before the panel automatically shuts-down. • Once shutdown, the unit would have to be restarted. A zero value disables this feature. Range = 0 - 240, default = 0 min.
Low Battery Warning:	The **Low Battery Warning** UP/DN buttons alter the time value (in minutes) available on the battery (for use) before the panel displays a low battery warning. • Range - 10 - 45, default = 15 min.

Battery Base Page Elements (Cont.)	
Very Low Battery Warning:	The **Very Low Battery Warning** UP/DN buttons alter the time value (in minutes) available on the battery (for use) before the panel displays a very low battery warning. This indicates a near-term panel shutdown. Range = 3 - 15, default = 5 min. *- This value can never exceed the Low Battery Warning value.* • **When the NXT-BP batteries (installed within the NXA-BASE/B battery base) reach a point where they need to be recalibrated.** - A recalibration pop-up screen appears to ask whether or not you choose to recalibrate the batteries at this time.
Battery Status fields:	This section provides the ability to monitor the current battery charge levels and charge qualities: • The **Combined Charge Status** bargraph indicates the combined power charge available from both internal battery connection slots (bargraph range = 0 - 100). • The **Battery One Charge Status** bargraph indicates the power charge available on the Slot 1 internal battery connection (bargraph range = 0 - 100). • The **Battery One Quality** bargraph indicates the physical capacity (quality) of the battery. Quality is the percentage of actual capacity vs. its rated capacity. ***For optimal performance, a battery should be replaced when the quality rating drops below 80%.*** • The **Battery Two Charge Status** bargraph indicates the power charge available on the Slot 2 internal battery connection (range = 0 - 100). • The **Battery Two Quality** bargraph indicates the physical capacity (quality) of the battery. Quality is the percentage of actual capacity vs. its rated capacity. • The **Base Version** field indicates the firmware version being used by the NXA-BASE/B Battery Base connected to the NXT Modero panel. • The **Battery Level Port** field indicates the port being used to report the combined charge status level back to the NetLinx Master on (set in TPD4). • The **Battery Level** field indicates the level being used to report the combined charge status level back to the NetLinx Master on (set in TPD4).
Battery Power Brightness Limit:	The DISABLE/DISABLED button acts as a power save feature with two available choices: • **Disable** - activates the brightness limit set on the Modero panel and is used to conserve battery power. Activating this feature causes the panel to function at 80% of full brightness and overrides the Panel Brightness value set on the Setup page. *This extends the battery usage time.* • **Disabled** - (*illuminated when selected*) deactivates this power save feature and makes the panel use the specified Panel Brightness level set on the Setup page.

NOTE

The term "quality" (in the context of a battery), refers to the current capacity relative to the batteries' rated capacity. For example, after constant use, a battery may be operating at 75% of its rated capacity even though it might be fully charged. In this case, the battery could be incorrectly reporting its' information back to the battery base and then consequently relating this information back to the Battery Base page. A battery can be recalibrated using an optional NXT-CHG (battery charger).

Protected Setup Navigation Buttons

The Protected Setup Navigation Buttons (FIG. 116) appear on the left of the panel screen when the Protected Setup page is currently active.

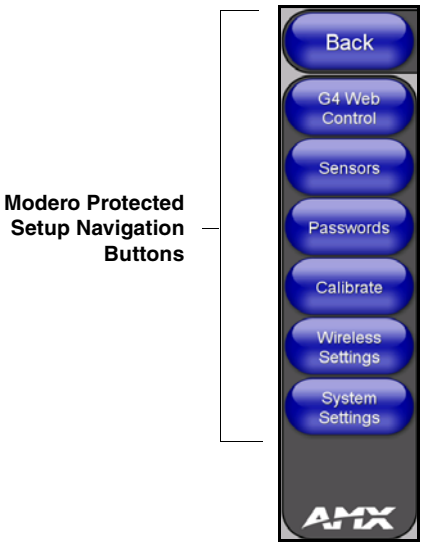

FIG. 116 Protected Setup Navigation Buttons

These Navigation Buttons are specific to these Modero panels and include the panel specific elements described in the following table:

Protected Setup Navigation Button Elements	
G4 Web Control:	Press the G4 Web Control button to access the G4 Web Control page where you can enable or disable display and control of your panel (via the web) by a PC running a VNC client. • Refer to the *Using G4 Web Control to Interact with a G4 Panel* section on page 116 for more detailed information.
Sensors:	Press the Sensors button to access the Sensors Setup page where you can modify/monitor both the light and motion sensor settings. • Refer to the *Sensor Setup Page* section on page 158 for more detailed information.
Passwords:	Press the Passwords button to access the Passwords Setup page where you can specify up to five security passwords. *Default password is 1988.* • Refer to the *Password Setup Page* section on page 160 for more detailed information.
Calibrate:	Press the Calibrate button to access the Calibration page where you can use the displayed set of crosshairs to calibrate a touch panel. • Refer to the *Calibration Page* section on page 161 for more detailed information.
Wireless Settings:	Press the Wireless Settings button to access the Wireless Settings page where you can setup the wireless connection parameters used by the optional NXA-PCI80211G wireless card. • Refer to the *Wireless Settings Page* section on page 162 for more detailed information.
System Settings:	Press the System Settings button to access the System Settings page where you can alter the communication parameters of both the NetLinx Master and Modero panel. • Refer to the *System Settings Page* section on page 166 for more detailed information.

Protected Setup Page

The Protected Setup page (FIG. 117) centers around the properties used by the panel to properly communicate with the NetLinx Master. Enter the factory default password (***1988***) into the password keypad to access this page.

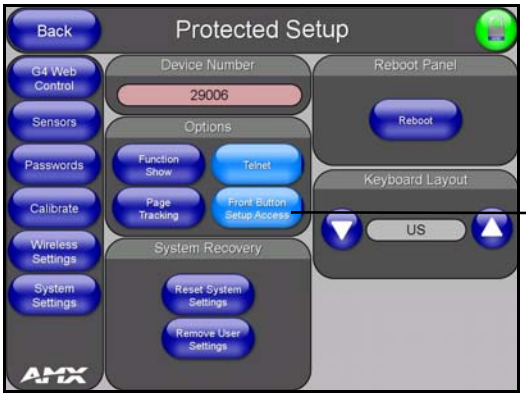

Provides access to the panel firmware pages by enabling the grey front setup access button:
- Setup page (after a **3 second** press/hold)
- Calibration page (after a **6 second** press/hold)

FIG. 117 Protected Setup page-showing default values

The elements of the Protected Setup page are described in the table below:

Protected Setup Page Elements	
Back:	Saves the changes and returns you to the previously active touch panel page.
Connection Status icon:	This visual display of the connection status allows the user to have a current visual update of the panel's connection status regardless of what page is currently active. • A Lock only appears on the icon if the panel has established a connection with a currently secured target Master (*requiring a username and password*).
Device Number:	Opens a keypad that is used to set and display the current device number.
Options:	Allows you to select various touch panel features: • The **Function Show** button enables the display of the channel port and channel code in the top left corner of the button, the level port and level code in the bottom left corner, and the address port and address code in the bottom right corner (see FIG. 119 for an example of the function locations). • Use the **Page Tracking** button to toggle page tracking. When enabled, the touch panel sends page data back to the NetLinx Master, or vice versa depending on the touch panel settings. • Use the **Telnet** button to enable or disable the telnet server on the panel. This feature focuses on direct telnet communication to the panel. • Use the **Front Button Setup Access** button to activate the grey Front Setup Access button (located below the LCD) to access the firmware pages. - Default condition is On. - Press and hold this grey button for **3 seconds** to access the Setup page. - Press and hold this grey button for **6 seconds** to access the Calibration page.
Reboot Panel:	Pressing this button causes the panel to restart after saving any changes.

Protected Setup Page Elements (Cont.)	
System Recovery:	Allows you to either reset the touch panel to factory default settings and/or wipe out all existing touch panel pages: • The **Reset System Settings** button allows a user to wipe out all current configuration parameters on the touch panel (such as IP Addresses, Device Number assignments, Passwords, and other presets). - Pressing this button launches a Confirmation dialog (FIG. 118) which asks you to confirm your selection. - This dialog is configured with a delay timer that does not enable the YES button for 5 seconds. This delay provides an additional amount of time for the user to confirm their decision. • The **Remove User Pages** button allows you remove all current TPD4 touch panel pages currently on the panel (*including the pre-installed AMX Demo pages*). - Pressing this button launches a Confirmation dialog (FIG. 118) which asks you to confirm your selection. - This dialog is configured with a delay timer that does not enable the YES button for 5 seconds. This delay provides an additional amount of time for the user to confirm their decision.
Keyboard Layout: *(build 2.60 or higher)*	Displays the listing of supported international keyboard settings. The following list allows the end-user to specify which international keyboard is being connected to the Modero touch panel and then which characters should be reflected within the G4 Computer Control and TakeNote applications: **- None** *(default)*, **Spanish, Italian, French, German, Swiss, UK,** and **US** ***Note: You must be using a standard 101 button keyboard to accurately utilize this feature.*** • Modero uses the open-source VNC character standards to transmit the character information to a target device such as a PC. • One of the issues which occurred in the past was that some 101-key foreign keyboard character sets were being incorrectly represented via the Computer Control and Take Note applications. • For example: Spanish keyboards consisting of Castilian character sets such as tilde (é) were being miscommunicated by the VNC application to the source computer and as a result, passwords were not properly being entered. • The VNC - Computer Control keyboard drivers found in earlier Modero firmware (**build 57 or earlier**) were using an English type/character set which was not fully utilizing all available foreign characters. • Several different countries have produced 101-key international keyboards, each with their own unique set of keys occupying the keyboard. Several of these keys are specific to the language they are used with.

You have a wait time of 5 seconds before the YES option is enabled.

FIG. 118 Protected Setup page-System Recovery confirmation dialog

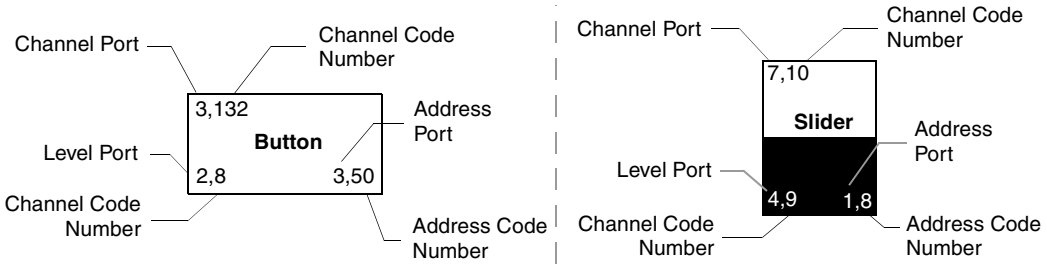

FIG. 119 Button/slider Function Show example

G4 Web Control Page

The G4 Web Control page (FIG. 120) centers around enabling and disabling both the display and control of your panel (via the web). An external PC running a VNC client (*installed during the initial communication to the G4 panel*) makes this possible.

FIG. 120 G4 Web Control page

Each panel supports the open standard Virtual Network Computing (VNC) interface. These panels contain a VNC server that allows them to accept a connection from any other device running a VNC client. Once a connection is established to that target device, the client can control the touch panel remotely. The elements of the G4 Web Control page are described in the table below:

G4 Web Control Page Elements	
Back:	Saves the changes and returns you to the previously active touch panel page.
Connection Status icon:	This visual display of the connection status allows the user to have a current visual update of the panel's connection status regardless of what page is currently active. • A Lock only appears on the icon if the panel has established a connection with a currently secured target Master (*requiring a username and password*).

G4 Web Control Page Elements (Cont.)	
G4 Web Control Settings:	Sets the IP communication values for the touch panel and contains:
Enable/Enabled	• The Enable/Enabled button allows you to toggle between the two G4 activation settings: - **Enable** - deactivates the G4 Web Control feature on the panel. - **Enabled** - activates the G4 Web Control feature on the panel and allows an external PC running a VNC client to access the panel (*after the remaining fields are configured*).
Network Interface Select	Displays the detected method of communication to the web: • **Wired** is used when a direct Ethernet connection is being used for communication to the web. *This is a default setting if no wireless interface card is detected by the panel.* • **Wireless** is used when a wireless card is detected within the internal card slot. This method provides an indirect communication to the web via a pre-configured Wireless Access Point.
Web Control Name	Allows you to enter a unique alpha-numeric string that is used as the display name of the panel within the Manage WebControl Connections window of the new NetLinx Security browser window. • This Web Control tab displays a G4 icon alongside the link to the Web Control Name given to this panel (FIG. 121).
Web Control Password	Allows you to enter the G4 Authentication session password associated for VNC web access of this panel.
Web Control Port	Allows you to enter the port value that the VNC Web Server runs on. • Default value is 5900.
Maximum Number of Connections	This read-only field displays the maximum number of users that can be simultaneously connected to the target panel via the web. • Default value is 1.
Current Connection Count	This read-only field displays the current number of users connected to the target panel via the web. *This value cannot exceed the Maximum number field.*
G4 Web Control Timeout:	Sets the length of time (in minutes) the panel can remain idle (no cursor movements) before the session is closed and the user is disconnected. • Minimum value = 0 minutes (panel never times-out) • Maximum value = 240 minutes (panel times-out after 240 minutes/4hours)

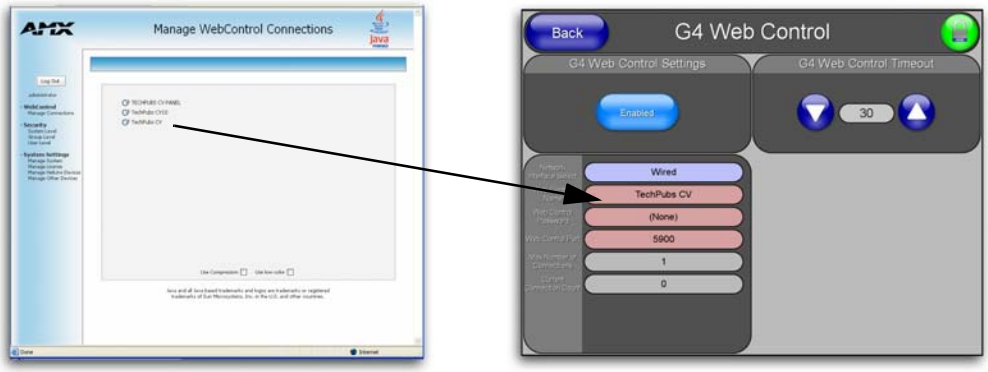

FIG. 121 Sample relationship between G4 Web Control and Mange WebControl Connections window

Refer to the *Using G4 Web Control to Interact with a G4 Panel* section on page 116 for more detailed instructions on how to use the G4 Web Control page with the new web-based NetLinx Security application.

Sensor Setup Page

The Sensor Setup page (FIG. 122) allows you to adjust the Light and Motion Sensor parameters on a Modero touch panel.

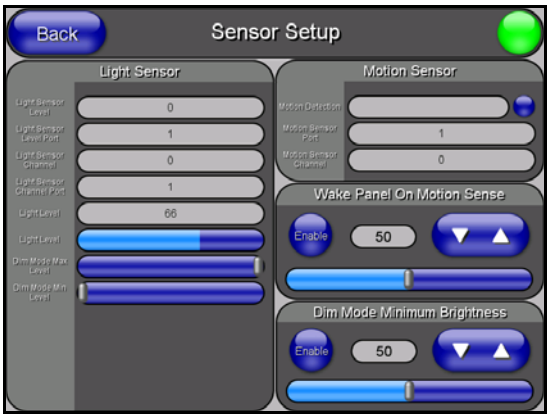

FIG. 122 Sensor Setup page

NOTE

A light level value between the Minimum and Maximum DIM Mode values delivers an average light level. The DIM mode Min Level can never exceed the DIM Mode Max Level.

The elements of the Sensor Setup page are described in the table below:

Sensor Setup Page Elements	
Back:	Saves the changes and returns you to the previously active touch panel page.
Connection Status icon:	This visual display of the connection status allows the user to have a current visual update of the panel's connection status regardless of what page is currently active. • A Lock only appears on the icon if the panel has established a connection with a currently secured target Master (*requiring a username and password*).
Light Sensor:	Allows you to monitor and alter the sensitivity of the Modero panel light sensor: • The **Light Sensor Level** field indicates the level used to report the light sensor level back to the NetLinx Master (set in TPD4) ***(read-only).*** • The **Light Sensor Level Port** field indicates the port used to report the light sensor level back to the NetLinx Master (set in TPD4) ***(read-only).*** • The **Light Sensor Channel** field indicates the level used to report the sensor channel back to the NetLinx Master (set in TPD4). It is On when you are below the Maximum dim mode level ***(read-only)***. • The **Light Sensor Channel Port** field indicates the port used to report the sensor channel back to the NetLinx Master (set in TPD4) ***(read-only).*** • The **Light Level** field provides a numeric value representing the current value of the light level detected by the on-board photo-sensor. • The Light Level bargraph displays a horizontal bargraph indicating the current value of the light level detected by the on-board photo-sensor. This bargraph provides a visual representation of the numeric value displayed within the **Light Level** field. • Use the **Dim Mode Max Level** bargraph to alter the Maximum DIM level value used to activate the DIM Mode Brightness Level (range = 0 - 100). • Use the **Dim Mode Min Level** bargraph to alter the Minimum DIM level value used to activate the DIM Mode Brightness Level (range = 0 - 100). - The position of this bargraph can never exceed that of the Dim Mode Max Level.

Sensor Setup Page Elements (Cont.)	
Motion Sensor:	Provides the following fields: • The **Motion Detection** field displays a reactive button that changes color (illuminates) and displays the words "Motion Detected" when motion is detected by the Modero panel's front motion sensor. • The **Motion Sensor Port** field indicates the port used to report the motion sensor channel back to the NetLinx Master (set in TPD4) ***(read-only).*** • The **Motion Sensor Channel** field indicates the channel used to report the motion sensor channel back to the NetLinx Master (set in TPD4) ***(read-only).***
Wake Panel On Motion Sense:	The Wake Panel Sensitivity relates to the sensitivity of the motion sensor to detect motion and wake the panel accordingly. • Toggle the **Enable**/**Enabled** button to either active/inactive this feature: - **Enable** - activates this feature. Activating this feature reactivates the panel from a panel timeout (sleep) mode. - **Enabled** - (*illuminated when selected*) deactivates this feature and makes the panel use the specified Display Timeout value set on the Setup page. • Use the **Wake Panel** UP/DN buttons to alter the sensitivity value. - Range = 0 - 100. • The horizontal WAKE PANEL SENSITIVITY bargraph indicates the current motion sensitivity value associated with waking the panel from a timeout.
Dim Mode Minimum Brightness:	Allows you to alter the sensitivity of the Modero panel light sensor: • Toggle the **Enable**/**Enabled** button to either active/inactive the DIM Mode feature: - **Enable** - activates this feature. Once active (by receiving a value below the Dim Mode Min Level value), the current light level ramps to the DIM Mode value within a few seconds. - **Enabled** - (*illuminated when selected*) deactivates this feature. • Use the **DIM Mode Brightness** UP/DN buttons to alter the DIM level. - Range = 0 - 100. - The lower the value, the darker a room must be before the LCD Brightness value changes to conform to a DIM room (and vice versa with a higher value). • The **DIM Mode Minimum Brightness** bargraph indicates the current DIM Mode Brightness level. - This level corresponds to the brightness level of the LCD used when the DIM Mode is active. - The Brightness value of the panel in a DIM room (low-light) is much less than that of a Non-DIM (well to brightly-lit) where the LCD Brightness must be higher to display the screen content clearly.

NOTE

There is a relationship between the motion sensor and the panel sleep feature. If a panel is set to Sleep Mode, there is a time delay before the motion sensor is activated to detect motion. By creating a time delay to the detection, this allows a user to set the sleep mode and leave the panels' detection range. In this way, the panel doesn't awake immediately after the sleep is active and you move away.

Using the Automated Brightness Control feature (DIM Mode)

Please follow the steps below to set up Automated Brightness Control:

1. Set the lighting conditions in the room to maximum (turn On all the lights).
2. Set the Maximum Panel Brightness, from the Setup page, to a comfortable level.

NOTE

Sitting in front of the panel, you should be able to comfortably see someone sitting behind the panel without being "blinded" by the panel.

3. Open the Sensors Setup page (FIG. 122 on page 158) from the Protected Setup menu sections.
4. Move around the panel and block the direct or indirect light from the room fixtures with your body. Take note of the drop in the lighting level being detected by the panel in response to your movements.
5. Set the Maximum brightness of the Dimmer (*Dim Mode Max Level*) below the detected drop. This will make sure that the panel does not react to variations in the lighting conditions of a normal working environment.

NOTE

The maximum (upper level) of the dimmer should be at least 15% lower than the maximum detected level.

6. Set the minimum lighting conditions in the room (not complete darkness but the minimal lighting setup, unless complete darkness is an "operational option" for the room).
7. Set the Minimum Dimmer Brightness (*Dim Mode Min Level*) to a comfortable level by sitting in front of the panel. You should be able to comfortably see someone sitting behind the panel without being "blinded" by the panel.
8. Move around the panel and block the direct or indirect light from the room fixtures with your body. Take note of the drop in the lighting level being detected by the panel in response to your movements.
9. Set the Minimum brightness of the Dimmer (*Dim Mode Max Level*) below the detected drop. This will make sure that the panel does not react to variations in the lighting conditions of a normal working environment.

NOTE

The minimum (lower level) of the dimmer should be at least 10% lower than the minimum detected level (ex: lower dimmer level at 30% if the detected lighting of the room is at 40%).

Password Setup Page

The Password Setup page (FIG. 123) centers around the properties used to assign passwords for the Modero panel pages.

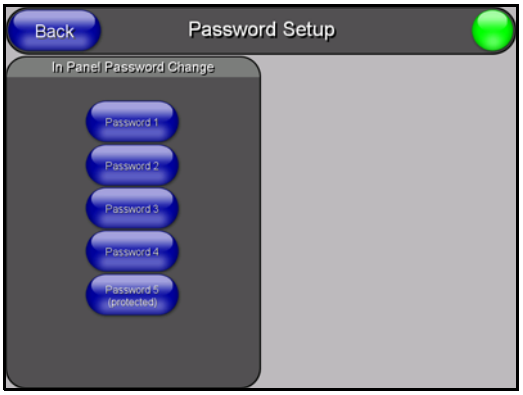

FIG. 123 Password Setup page

The elements of the Password Setup page are described in the table below:

Password Setup Page Elements	
Back:	Saves the changes and returns you to the previously active touch panel page.
Connection Status icon:	This visual display of the connection status allows the user to have a current visual update of the panel's connection status regardless of what page is currently active. • A Lock only appears on the icon if the panel has established a connection with a currently secured target Master (*requiring a username and password*).
In Panel Password Change:	Accesses the alphanumeric values associated to particular password sets. • PASSWORD 1, 2, 3, 4, 5 (protected) buttons open a keyboard where you can enter alphanumeric values associated to a selected password group. • Clearing Password #5 removes the need to enter a password before accessing the Protected Setup page.

Calibration Page

This page (FIG. 124) allows you to calibrate the input touch device (touch panel) using the pre-selected touch driver.

- Press and hold the grey Front Setup Access button (below the Modero LCD) for 6 seconds to access the Calibration page.
- **Press the crosshairs to calibrate the panel and return to the last active firmware page.**

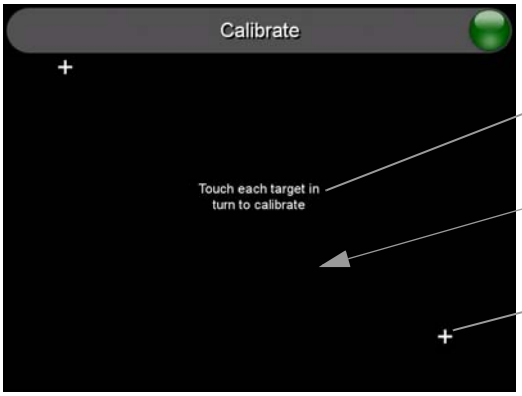

The request to touch the crosshairs is the first on-screen message

Calibration successful is the second on-screen message that appears after the calibration process is completed

On-screen crosshairs used for calibration of the touch device

FIG. 124 Calibration page (actually 3 separate screens)

NOTE

If the calibration was improperly set and you cannot return to the Calibration page (through the panel's firmware); *you can access this firmware page via G4 WebControl where you can navigate to the Protected Setup page and press the Calibrate button through your VNC window.*
This action causes the panel to go to the Calibration page seen above, where you can physically recalibrate the actual touch panel again using the above procedures.

Wireless Settings Page

The Wireless Settings page (FIG. 125) sets the communication information for the installed wireless interface card. This information includes its corresponding IP communication parameters, wireless communication settings, and read the device number assigned to the Modero panel. These panels can use the optional NXA-PCI80211G wireless card for wireless communication. This card also supports *Wired Encryption Protocol* (WEP) encryption of 64-bit and 128-bit key lengths.

Refer to both the *Wireless Settings Page - Wireless Access Overview* section on page 101 and *Configuring a Wireless Connection* section on page 102 for more detailed information of setting up the Modero panel for wireless network access.

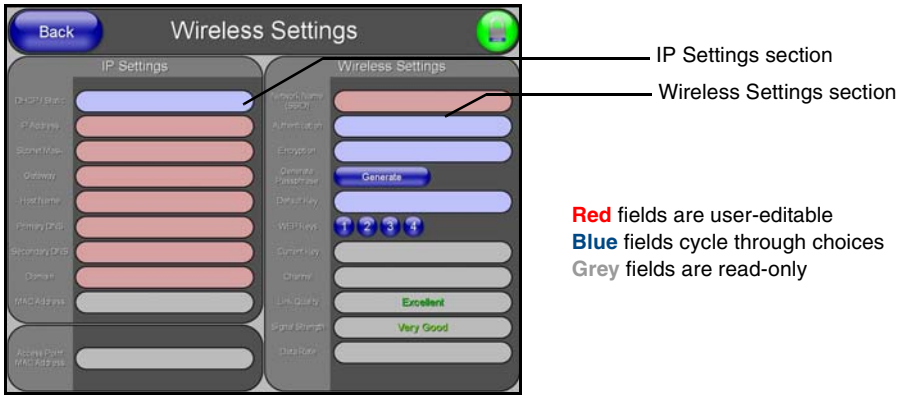

FIG. 125 Wireless Settings page (showing default values)

The elements of the Wireless Settings page are described in the table below:

Wireless Settings Page Elements	
Back:	Saves the changes and returns you to the previously active touch panel page.
Connection Status icon:	This visual display of the connection status allows the user to have a current visual update of the panel's connection status regardless of what page is currently active. • A Lock only appears on the icon if the panel has established a connection with a currently secured target Master (*requiring a username and password*).
IP Settings:	Sets the IP communication values for the touch panel and contains:
DHCP/STATIC	Sets the panel to either DHCP or Static communication modes. • *DHCP (Dynamic Host Configuration Protocol)* assigns IP Addresses to client stations logging onto a TCP/IP network from a DHCP server. • *Static IP* is a permanent IP Address that is assigned to a node in a TCP/IP network. ***Note:*** *If DHCP is selected, the following fields become read-only: IP Address, Subnet Mask, Gateway, Primary DNS, Secondary DNS, and Domain.*
IP Address	Sets the secondary IP Address assigned to the panel.
Subnet Mask	Sets a subnetwork address to the panel. • *Subnetwork mask* is the technique used by the IP protocol to filter messages into a particular network segment (subnet).
Gateway	Sets a gateway value to the panel. • *Gateway* is a computer that either performs protocol conversion between different types of networks/applications or acts as a go-between for two or more networks that use the same protocols.

Wireless Settings Page Elements (Cont.)	
IP Settings (Cont.):	
Host Name	Sets the host name of the panel. • PRIMARY DNS sets the address of the primary DNS server being used by the Modero panel for host name lookups. - *DNS (Domain Name System)* is software that lets users locate computers on a local network or the Internet (TCP/IP network) by host and domain. The DNS server maintains a database of host names for its' domain and their corresponding IP Addresses. • SECONDARY DNS sets the secondary DNS value to the panel.
Primary DNS	Sets the address of the primary DNS server used by the panel for host name lookups.
Secondary DNS	Sets the secondary DNS value to the Modero panel.
Domain	Sets the unique name on the Internet to the panel for DNS look-up.
MAC Address	This value is factory set by the manufacturer of the wireless mini-PCI Ethernet card.
Access Point MAC Address:	This value is factory set by the manufacturer of the Wireless Access Point (WAP). • When communicating with a WAP200G enter the MAC Address (**BSSID**) of the target WAP as the Access Point MAC Address. Refer to the ***WAP200G*** *Instruction Manual* for more detailed information on the interaction between these two product lines.
Wireless Settings:	Sets the communication values for the optional NXA-PCI80211G mini-PCI wireless communication card (if present).
Network Name (SSID)	Provides the Service Set Identifier (SSID), required by the panel, before it is permitted to join the wireless network. The SSID is the unique name used on the WAP and assigned to all panels in a wireless network that are communicating to the same target WAP. • It is case sensitive and must not exceed 32 characters, which may be any keyboard character. Make sure this setting is the same for all points in your wireless network. • This unique string identifies the network and is the same string for all users on the same network.
Authentication	Toggles between the two authentication modes: *Open System* or *Shared Key*: • An *Open system* network allows connections from any client without authenticating whether that client has permission to associate with the network. • A *Shared key network* requires the client to submit a key which is shared by the network Wireless Access Point before it is given permission to associate with the network. ***In this case the key is the same as the WEP encryption key***. • In both cases, even after association has taken place, if WEP encryption has also been enabled then the client will still require the WEP key to encrypt and decrypt packets in order to communicate successfully with the network.
Encryption	Cycles through the available encryption options: *Clear Text, WEP64, and WEP128*. Wired Equivalent Privacy is an 802.11 security protocol for wireless networks. The WEP encryption method is designed to provide the "equivalent" security available in wireline networks. • **Clear Text** causes network packets to be sent out as unencrypted text. • **WEP64** enables WEP encryption at 64-bits. In this case all packets will be transmitted with their contents encrypted using the Default WEP Key. • **WEP128** enables WEP encryption at 128-bits. All packets are transmitted with their contents encrypted using the Default WEP Key. • If the key is not the correct size, the system will resize it to match the number of bits required for the WEP encryption mode selected.

Wireless Settings Page Elements (Cont.)	
Wireless Settings (Cont.):	
Generate (Passphrase)	Pressing the **Generate** button displays an on-screen keyboard which allows you to enter a passphrase and then AUTOMATICALLY generate all four WEP keys which are compatible only among Modero panels. • **Note:** The code key generator on Modero panels use the same key generation formula. Therefore, this same Passphrase generates identical keys when done on any Modero because they all use the same Modero-specific generator. The Passphrase generator is case sensitive. • Take these WEP keys and enter them into the target WAP. When also working with multiple panels, these WEP Keys (*identical across all Modero panels*) must be entered manually into the target WAP. • Once all panels have been setup in this way, these WEP keys can then be entered into the associated Wireless Access Point for ease of installation. • The Passphrase generator is unique to Modero panels. The Key generator on these Modero panels are specific and do not generate the same keys as other external non-AMX wireless devices. - Example: If you enter the word **apple** into the Passphrase generator on a 3rd-party Wireless Access Point, it comes back with 1a:2b:3c:4d:etc. Entering the same **apple** in the Passphrase generator of any Modero panel generates a different key: a1:b2:c3:d4:etc. Only AMX Modero panels generate **the same** Current Key by using a unique Passphrase key generation technology. A Current Key string, when generated anywhere else, will not match those created on the Modero panels. ***Note:*** *The code key generator on Modero panels use the same key generation formula.The passphrase generator is case sensitive.*
Default Key	Cycles through the four available WEP key identifiers in order to select a WEP key to use. *As the Default Key value is altered (through selection) the corresponding Current Key is displayed. Each of these corresponds to a WEP key.* • This feature is useful for accessing different networks without having to re-enter that networks' WEP key. • It is also sometimes used to set up a rotating key schedule to provide an extra layer of security.
WEP Keys	This feature provides you with another level of security by selecting a Key value. • A single button is available for each WEP key up to a maximum of four keys. • Pushing any of these buttons brings up an on-screen keyboard. Keys should be entered in hexadecimal notation. It is common practice for every two characters (representing a single byte) to be separated by a colon. • Press **Done** to accept any changes and save the new value. • **Ex: 01:0A:67:F3:56**, although this is not necessary and the key may be entered by omitting the colons. A 64-bit key will be 10 characters in length while a 128-bit key will be 26 characters in length. The length of the key entered determines the level of WEP encryption employed. Either 64-bit or 128-bit. • 128-bit keys may also be entered and are used if supported by the internal wireless card.
Current Key	Displays the current WEP key in use. Keys may also be examined by touching the key buttons and noting the keyboard initialization text. • When working with a single panel and a single WAP, it is recommended that you manually enter the Current Key from the WAP into the selected WEP Key. • When working with a single WAP and multiple panels, it is recommended that you generate a Current Key using the same passphrase on all panels and then enter the panel-produced WEP key manually into the Wireless Access Point.

Wireless Settings Page Elements (Cont.)	
Wireless Settings (Cont.):	
Channel	The RF channel being used for connection to the WAP (***read -only***). • This is determined through the WAP.
Link Quality	Displays the current quality of the link (*as descriptive colored text*) from the wireless NIC to the Wireless Access Point in real time. • The bargraph has been replaced with a descriptions: **None**, **Poor**, **Fair**, **Good**, **Very Good**, and **Excellent**. *Green color text indicates better communication quality.* • It reports the quality of the signal over the air (direct sequence spread spectrum). Even when the link quality is at its lowest you still have a connection and with it the ability to transmit and receive data, even if at much lower speeds. ***Note:*** *Both Link Quality and Signal Strength are applicable to the RF connection only. It is quite possible to have an RF signal to a Wireless Access Point but be unable to communicate with it because of either incorrect IP or encryption settings.*
Signal Strength	SNR (Signal Noise Ratio) is a measure of the relative strength of a wireless RF connection. This indicator displays a description of the signal strength from the Wireless Access Point connection. • The bargraph has been replaced with a descriptions: **None**, **Poor**, **Fair**, **Good**, **Very Good**, and **Excellent**. *Green color text indicates better signal strength.* • Given this value and the link quality above, a user can determine the noise level component of SNR. Ex: If the signal strength is high but the link quality is low then the cause of the link degradation is noise. However, if the signal strength is low and the link quality is low the cause would simply be signal strength.
Data Rate:	The data rate (in Mbps) at which the panel is currently communicating with a target WAP at (dynamic). • As you move closer to the target WAP (and both the signal strength/quality), the data rate increases and as the quality degrades this rate decreases. • Data rates for 802.11g communication are: 1, 2, 5.5, 11, and 54 Mbps. • Ex: 802.11g has a max data rate is 54 Mbps.

Refer to both the *Wireless Settings Page - Wireless Access Overview* section on page 101 and *Configuring a Wireless Connection* section on page 102 for more detailed information of setting up the Modero panel for wireless network access.

System Settings Page

The System Settings page (FIG. 126) sets the Secondary DNS Address information with its corresponding IP communication parameters, NetLinx Master communication settings, and reads the device number assigned to the Modero panel.

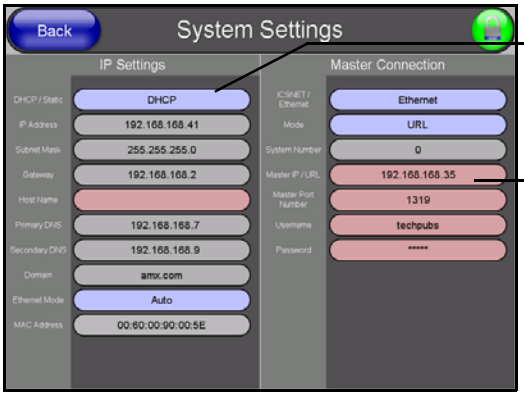

IP Settings section

Master Connection section
(NetLinx Master properties)

Master Connection features are not saved until the panel is rebooted

Red fields are user-editable
Blue fields cycle through choices
Grey fields are read-only

FIG. 126 System Settings page showing default values (reads and assigns values to the panel and Master)

The elements of the System Settings page are described in the table below:

System Settings Page Elements	
Back:	Saves the changes and returns you to the previously active touch panel page.
Connection Status icon:	This visual display of the connection status allows the user to have a current visual update of the panel's connection status regardless of what page is currently active. • A Lock only appears on the icon if the panel has established a connection with a currently secured target Master (*requiring a username and password*).
IP Settings:	Sets the IP communication values for the panel and contains:
DHCP/Static	Sets the panel to either DHCP or Static communication modes. • *DHCP (Dynamic Host Configuration Protocol)* assigns IP Addresses from client stations logging onto a TCP/IP network via a DHCP server. • *Static IP* is a permanent IP Address that is assigned to a node in a TCP/IP network.
IP Address	Sets the secondary IP Address assigned to the panel.
Subnet Mask	Sets a subnetwork address to the panel. • *Subnetwork mask* is the technique used by the IP protocol to filter messages into a particular network segment (Subnet).
Gateway	Sets a gateway value to the panel. • *Gateway* is a computer that either performs protocol conversion between different types of networks/applications or acts as a go-between two or more networks that use the same protocols.
Host Name	Sets the host name of the panel.
Primary DNS	Sets the address of the primary DNS server used for host name lookups. • *DNS (Domain Name System)* is software that lets users locate computers on a local network or the Internet (TCP/IP network) by host and domain. The DNS server maintains a database of host names for its' domain and their corresponding IP Addresses.
Secondary DNS	Sets a secondary DNS value to the panel.
Domain	Sets the unique name on the Internet to the panel for DNS look-up. • The panel belongs to the DNS domain.

System Settings Page Elements (Cont.)	
Master Connection (Cont.):	
Ethernet Mode	Sets the speed of the Ethernet connection to the panel. • Choices are: **Auto**, **10 Half Duplex**, **10 Full Duplex**, **100 Half Duplex,** or **100 Full Duplex.**
MAC Address	Displays a read-only field that is factory set by AMX for the built-in Ethernet interface.
Type	Sets the NetLinx Master to communicate with the panel via either USB or Ethernet. This is based on the cable connection from the rear. ***ICSNet is not a supported option on this panel.*** • *Ethernet* is a CAT-5 cable (10/100Base T terminated in an RJ-45 connector) used to network computers together and is used in most LAN (local area networks). This description is also used to refer to both wired and wireless communication. • *USB* option cannot be used on Modero panels which are not equipped with a rear USB port.
Mode	Cycles between the different connection modes (URL, Listen, and Auto) ***(ETHERNET Only - disabled when USB is selected)*** • **URL** - In this mode, enter the IP/URL, Master Port Number, and username/password (if used) on the Master. - The System Number field is read-only because the panel obtains this information from the communicating Master. • **Listen** - In this mode, add the Modero panel address into the URL List in NetLinx Studio and set the connection mode to Listen. This mode allows the Modero touch panel to "listen" for the Master's communication signals. - The System Number and Master IP/URL fields are red-only. • **Auto** - In this mode, enter the System Number and a username/password (if applicable). This mode is used when both the panel and the NetLinx Master are on the same Subnet and the Master has its UDP feature enabled. - Master IP/URL field is read-only.
System Number	Allows you to enter a system number. Default value is 0 (zero). ***(ETHERNET Only - disabled when USB is selected)***
Master IP/URL	Sets the Master IP or URL of the NetLinx Master. ***(ETHERNET Only - disabled when USB is selected)***
Master Port Number	Allows you to enter the port number used with the NetLinx Master. • Default value is 1319. ***(ETHERNET Only - disabled when USB is selected)***
Username/Password	If the target Master has been previously secured, enter the alpha-numeric string (into each field) assigned to a pre-configured user profile on the Master. This profile should have the pre-defined level of access/configuration rights.

Refer to the *Step 2: Choosing a Master Connection Mode Setting* section on page 110 for more detailed information on using the System Settings page.

Displaying Stream Content

Overview

The current build of Modero firmware currently supports the display of both MPEG-2 and MPEG-4 media streams via the TPDesign touch panel pages. These incoming media signals can utilize either a UDP or RTP Transport protocol. For the purposes of these instructions, we will be setting up a Modero touch panel to display an incoming media stream sent from a MAX Video Encoder. To fully utilize **both** MPEG-2 and MPEG-4 streaming functionality, you must be using the latest Modero firmware.

MAX-CSE Media Encoder can currently stream A/V signals and direct them to IP-enabled devices capable of interpreting and displaying the incoming MPEG data using either RTP or UDP Transport Protocols. These outgoing signals can be displayed by a:

- VG-Series Modero Touch Panel (supporting MPEG-2/MPEG-4 streams)
- Computer running third-party multi-media player capable of supporting UDP/RTP streaming protocols.
  - At this time, we are recommending using the open-source VLC Media Player® (version 0.8 or higher).

Supported transport protocols include: **UDP** or **RTP**.

A protocol is a convention or standard that controls or enables the connection, communication, and data transfer between two computing endpoints. In this case, between the MAX-CSE and the target IP-capable device (Modero).

NOTE

IP Multicasting is supported under both the UPD and RTP communication protocols. ***If using RTP, it is strongly recommended that this port number be an even value. Using an odd numbered port value can cause the stream from a MAX-CSE to not be properly recognized by the target Modero panel.***

- **UDP** (User Datagram Protocol) is a connectionless protocol, such as TCP, that runs on top of IP networks. Unlike TCP/IP, UDP/IP provides a direct way to send and receive datagrams over an IP network. It's primarily used for broadcasting messages over a network. Data is sent as a Transport Stream by using only the MPEG-2 codec.
  - In a UDP stream, only a Target (video) Port is needed since both the audio and video information are transported together to the same port on the destination device.
- **RTP** (Real-Time Transport Protocol) is an Internet protocol used for transmitting real-time data such as audio and video as separate entities. Data is sent as an Elementary Stream which can use both the MPEG-2 and MPEG-4 codecs.
  - In an RTP stream, both a Target (video) Port and Target Audio Port are required because the audio and video are delivered to a destination as separate data elements. These elements are then directed to two separate ports where they are then "synced-up" by target device/application.

NOTE

If using RTP, both the Target Port and Target Audio Port ***must be different****.*

- **IP Multicasting** is a method of sending out large amounts of data. IP Multicast allows a server to broadcast a message to many recipients simultaneously. Unlike traditional Internet communication, that requires separate connections for each source-destination pair, IP Multicasting allows several recipients to share data from the same source. This means that just one set of packets is transmitted to all the destinations.
  - An ideal method of sharing a single stream to several destinations.

One of the best uses for this method would be if an educator (or institution) wanted to stream (via either UDP or RTP) its lecture series to a variety of students simultaneously around the world. Every student could connect and receive the stream without having to wait their turn to view the content or see a severe drop in transmission quality.

Requirements for Receiving Streamed Content

To receive and display content via a Modero panel:

- Verify you have installed the latest version of TPDesign4 on your PC. Updates are available from the **www.amx.com > Tech Center > Application Files > Touch Panel Design Tools** section of the website. This application is needed to create the necessary page (popup page) used to display the incoming MPEG audio/video stream, identify the IP of the source MAX-CSE, and define the target audio/video ports on the panel.
- Verify you have installed the latest firmware on your target Modero panel. Updates are available from the **www.amx.com > Tech Center > Firmware Files > Modero Panels** section of the website. Modero VG-Series firmware version 2.55.12 or earlier only supports MPEG-2 streaming media (*using UDP*).
  MPEG-4 is only supported by the VG-Series Modero panel firmware version 2.60.25 or higher.

NOTE

If using RTP (as both the Target Port and the Target Audio Port for the split stream), ***it is strongly recommended that this port number be an even value. Using an odd numbered port value will cause the stream to not be properly recognized by the target Modero panel.***
When using Modero firmware version 2.60.25 (or higher), a UDP Transport Protocol can use either odd or even ports.

- It is necessary to understand that Modero firmware is configured to look for audio on a port whose value is two greater than that set for the video port. When configuring the Target Video and Target Audio ports within the MAX-CSE's UI Stream Profiles page, the value entered into the *Target Audio* field must be exactly 2 above the value entered into the *Target Port* (video) field.
  - If you enter a *Target Port* value of **5000**, when using RTP, you must enter a value of **5002** into the *Target Audio Port* field.
  - If using UDP, only the *Target Port* (video) field is user-definable because both the video and audio are sent out by the CSE as one stream and therefore there is no reason to define a separate audio port. Entering a value of **5000** into this field will, by default, cause the target Modero panel to look for the incoming audio portion of the stream on the same port as the video (port **5000**).
- Obtain the IP Address being used by the target Modero panel by locating the *IP Address* field on the firmware's System Settings page.

- Determine what is the available data rate for the network on which the encoder currently resides. This information will determine what encoder profile can be used on the outgoing media content. If the network can only handle a throughput of 4 Mbps from the encoder, it is recommended that you use something less than or equal to the **High Quality** encoder profile.

Setting up a Modero Panel to Receive and Display a Stream

The MAX-CSE must first be prepared to stream to the target Modero panel prior to creating the necessary TPDesign4 panel pages (later be uploaded to the panel).

Step 1: Obtaining the IP Address of the target panel

1. Press the grey Front Setup Access button for **3 seconds** to open the Setup page (FIG. 127).

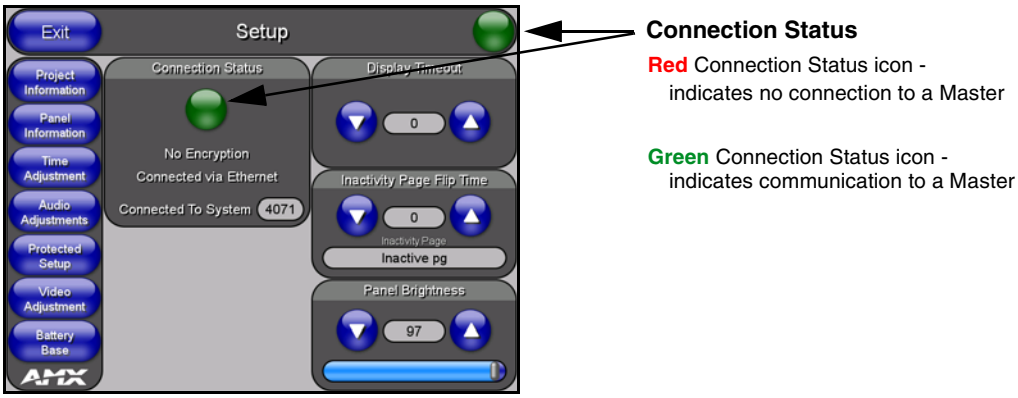

FIG. 127 Setup page

2. Press the **Protected Setup** button (located on the lower-left of the panel page) to open the Protected Setup page and display an on-screen keypad.
3. Enter ***1988*** into the Keypad's password field and press **Done** when finished.
4. Press the **System Settings** button (located on the Protected Setup page) to open the System Settings page and obtain the IP information from the *IP Address* field (FIG. 128).

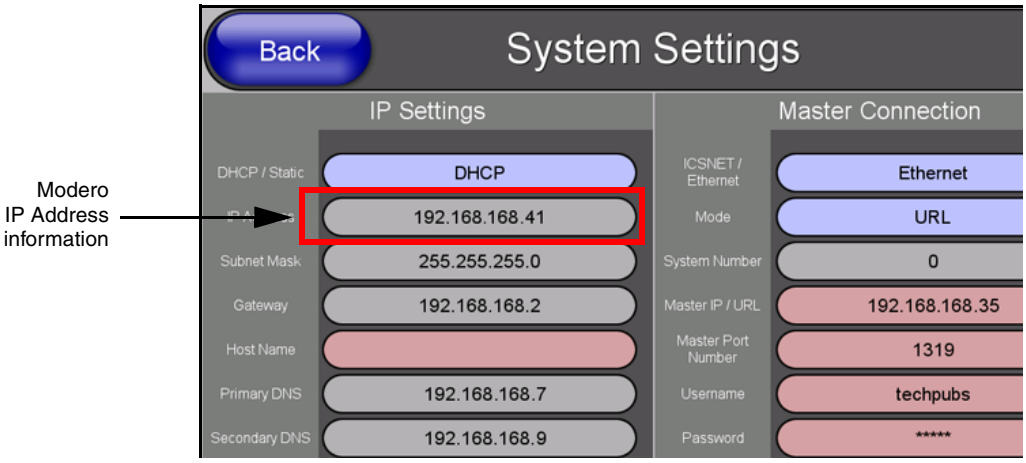

FIG. 128 System Settings page

Step 2: Configuring the MAX-CSE for communication

1. Complete the procedures outlined within the *Configuring the MAX Communication Parameters* section of the MAX-CSE Instruction Manual to establish an active connection to the source MAX-CSE.
2. Confirm the MAX-CSE is properly configured to use the newly established Static IP Address by launching your browser and entering the MAX's new Static IP Address into the browser's *Address* field.
3. Press the **Enter** key on your keyboard to initiate the communication process and launch the initial on-screen Enter Network Password security dialog.
4. Enter the words **administrator** and **password** *(if using the default login profile)* into the corresponding *User Name/Password* fields. This is the factory default security login information.
5. Click **OK** to enter the information and proceed to the Administration page which provides both a descriptive overview of the program stream and lists the currently used firmware.
6. Determine the data throughput available on the network being used by the source encoder. This information determines which Encoder Profile and Transport Protocol will be used to encode the outgoing media stream.
7. Access Stream Profiles page (FIG. 129) by clicking the **Stream Profiles** link from within the Navigation frame. This page allows a user to both configure the properties of the outgoing media stream and setup the properties associated with communicating the stream to an external IP-enabled device capable of receiving and processing the data.

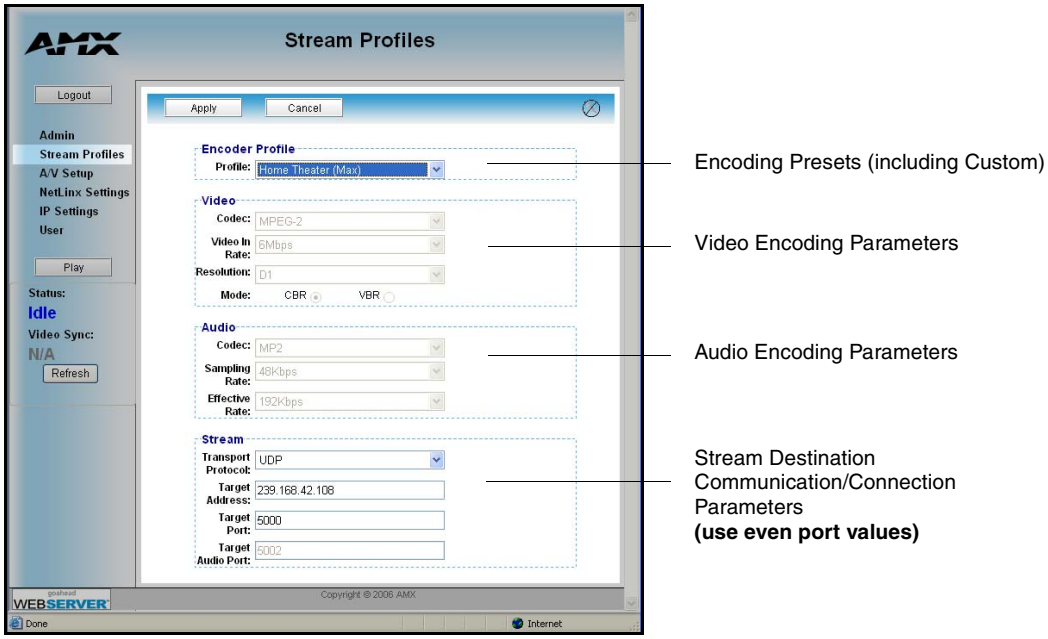

FIG. 129 Stream Profiles page

8. From the *Profile* field, click on the drop-down arrow and from the available list, choose the desired encoder setting which conforms to the available data throughput on your network. Although the default selection is **Home Theater (Max)**, the user can choose from up to 6 pre-created entries and one **Custom** entry which makes every field user-definable.
   - For the purpose of these procedures, we've been informed that our network can handle the full 6 Mbps data throughput, so we'll select **Home Theater (Max)**.

9. Click the **Apply** button to save the encoding profiles to the MAX (FIG. 130).
10. From the Stream section of the page, locate the *Transport Protocol* field and use the drop-down arrow to select a desired protocol. For the purposes of these procedures, we've chosen **UDP** as the protocol (FIG. 130).
    - An UDP protocol is typically used with higher-bandwidth streams and only requires the entry of a single Target Port because both the video and audio are combined into a single media stream. With this method, the Modero panel always utilizes an audio port value of two greater than that used by the Target Port.
    - An RTP protocol is typically used both with lower-bandwidth streams and when user wants to purposely separate the video and audio information into two distinct streams. With this method, the Target Audio Port must be manually entered and **CAN NOT** be the same value as the Target Port used for video.
11. Enter the previously obtained IP Address of the target Modero panel (FIG. 128) into the *Target Address* field (FIG. 130).
12. Enter a numeric value into the *Target Port* field. This field corresponds to the port on the destination device where the outgoing video (*audio/video*) stream is being directed to.
    It is recommended that this value not currently be used by another port on the target device.
    It is recommended that the following ports also not be used: 21, 22, 23, 80, 443, and 1319.
    - For the purposes of these procedures, we've chosen to use **5000** as the video Target Port.
13. If using RTP as a Transport Protocol, enter a value into the *Target Audio Port* field. This field corresponds to the port on the destination device where the audio only portion of the stream is being directed to. **This value can not match the value entered into the *Target Port* field above.**
    If using UDP as a Transport Protocol, this field becomes greyed-out and unused since the both the audio and video content is being combined into a single stream.
    - For the purposes of these procedures, we are not required to enter a Target Audio Port value because the A/V content is not begin streamed separately (FIG. 130).

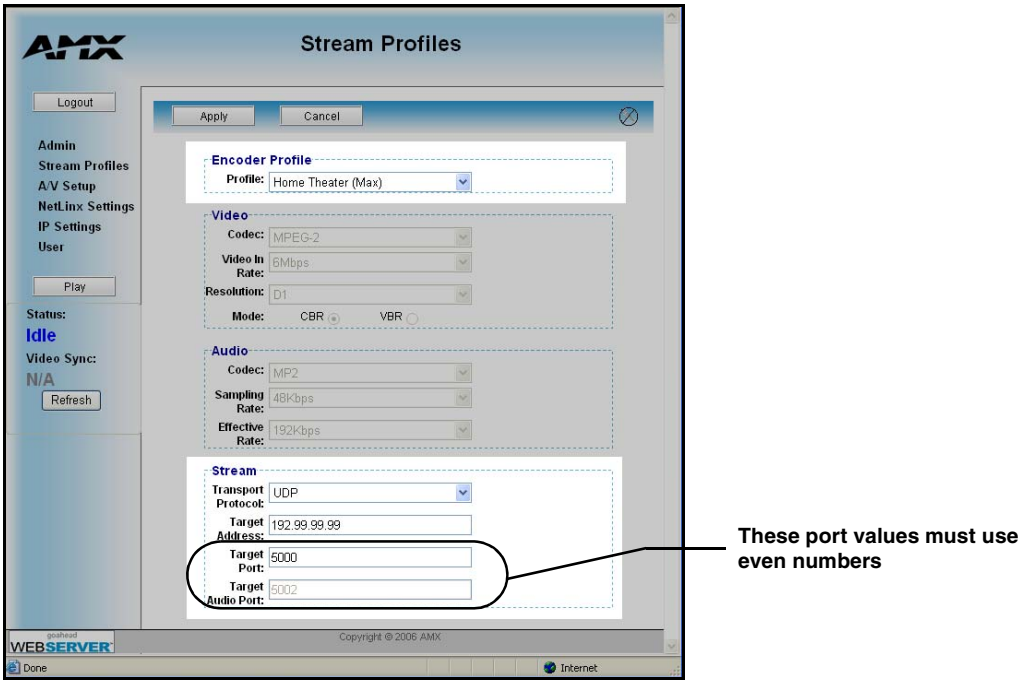

FIG. 130 Stream Profiles page (showing a sample configuration)

14. Click the **Apply** button to save the encoding profiles to the MAX-CSE.

If using RTP, both the Target Port and Target Audio Port ***must be different and should use even numbers****.*

Step 3: Configuring the MAX-CSE audio/video inputs

1. Complete the MAX-CSE connection and wiring procedures outlined within the *Wiring the MAX-CSE connectors and cables* section of the MAX-CSE Instruction Manual.
2. Access the A/V Setup page (FIG. 131) by clicking the **A/V Setup** link from within the Navigation frame. This page provides the user with the ability to select the source of the incoming video signal (from either the rear Composite or S-Video port), the format of the incoming video (NTSC/PAL), and the gain given to the incoming audio signal.

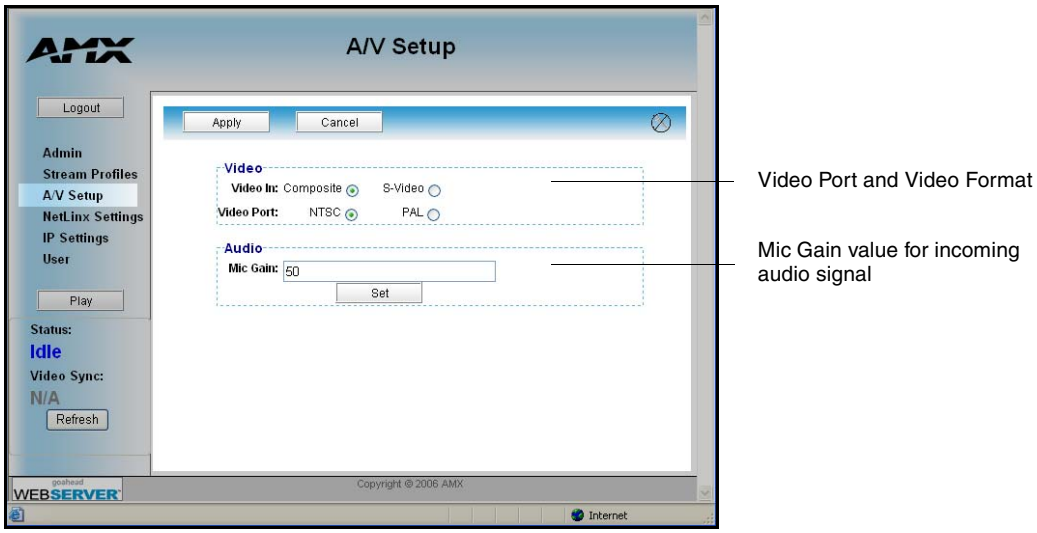

FIG. 131 A/V Setup page

3. From within the Video section of this page, check off the appropriate Video In and Video Port radio boxes which correspond to both the type of video signal being used and its associated format.
   - For the purpose of these procedures, we've chosen to feed an NTSC signal into the rear Composite video connector. As a result, a user should "check-off"/select both the **Composite** and **NTSC** radio boxes.
4. If you are feeding a microphone audio signal into the rear MAX-CSE microphone connector, you could use the *Microphone Gain* field to enter an audio level (0 - 99) associated with the gain used by the rear microphone input.

At any time, the user can choose to mute the incoming microphone signal by either toggling the state of the Microphone icon located at the top of the page or entering a value of zero into the Mic Gain field.

5. Click the **Apply** button to save the encoding profiles to the MAX-CSE.

Step 4: Setup a streaming page within TPDesign4

1. Launch TPDesign4 (default location is **Start** > **Programs** > **AMX Control Disc** > **TPDesign4** > **TPDesign4**). *Refer to the TPDesign4 Instruction Manual for more detailed instructions of these procedures.*
2. From the menu bar, select **File** > **New** (or click the **New Project** toolbar button).
3. From within the Step 1 dialog, enter a generic *Job name* and use the *Panel Type* drop-down arrow to choose a VG-Series panel (1200VG, 1500VG, or 1700GVG).
   - For the purpose of these procedures, we've chosen to use a Job Name of **Test** and have selected an **NXD-1700VG** touch panel (FIG. 132).

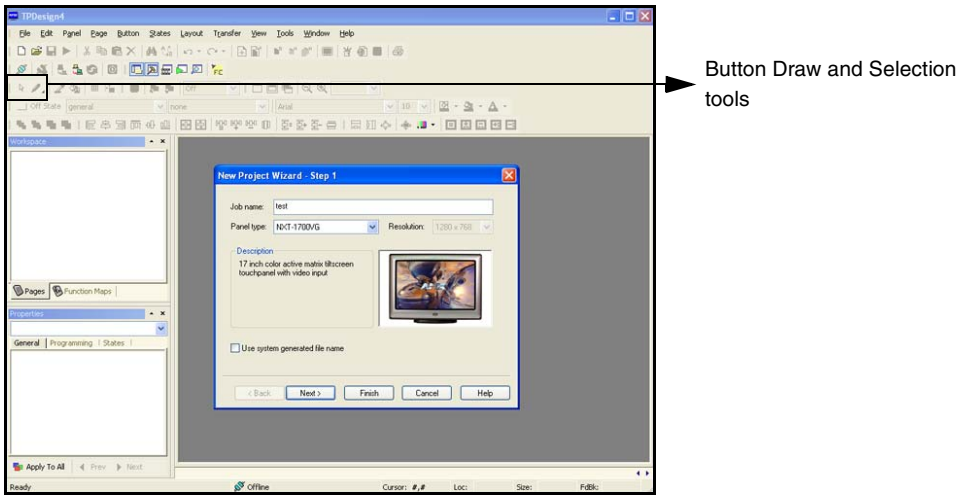

FIG. 132 Sample VG-Series TPD4 panel project

4. Fill in the fields within the remaining New Project Wizard dialogs and click **Next** at the end of each dialog to proceed final dialog.
5. Click the **Finish** button in the last dialog to close the wizard and proceed to the first generic page which is ready for you to start adding pages, popup pages, and buttons.
6. Add a new page to the project by selecting **Page** > **Add Page** (or click the toolbar icon) which opens the Add Page dialog, where you can then enter a descriptive name for the new page in the Name field such as ***Full Screen Video (UDP)***.
   - Note that although a page cannot directly be setup to display a video stream, a user can create a full-screen button on that same page which can be configured to fill its contents with a video stream.
7. Press the **Button Draw Tool** (CTRL+U) to begin drawing a square button onto the blank page (FIG. 132).
8. Press the **Selection Tool** (CTRL+L) to grab the new button and stretch it to fill a desired area of the page. For our procedures, we stretched the new button to fill the entire available are of the newly created page (FIG. 133).
9. With the button currently selected and active, navigate to the left section of the Workspace and find the **Button Properties** Control window (FIG. 133).

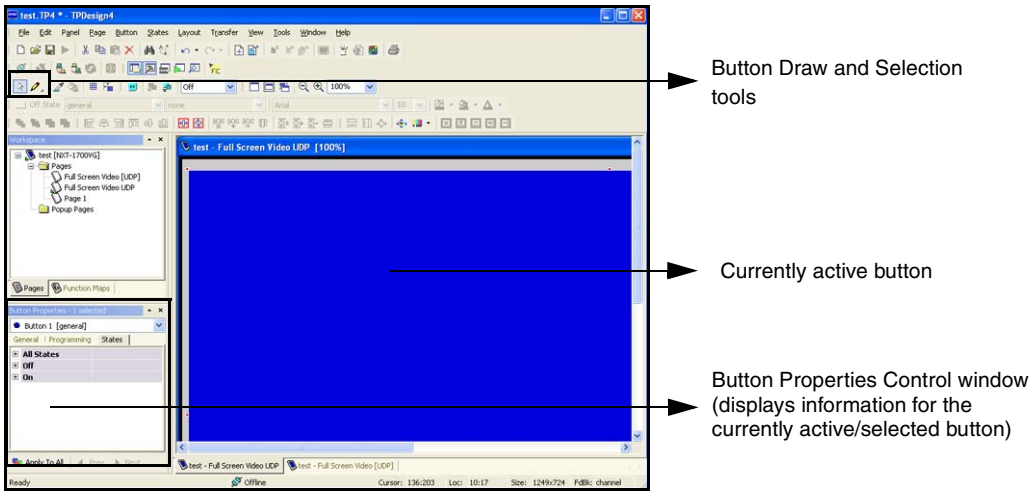

FIG. 133 Button Properties tab

10. Click the **States** tab of the Button Properties Control window to show a list of all states associated with the selected button. Each state represented in the States tab is a collapsed folder containing the state properties for that particular state (**On/Off/All**).

11. Double-click the **All States +** symbol to expand this folder (FIG. 134) and locate the *Video Fill* field.

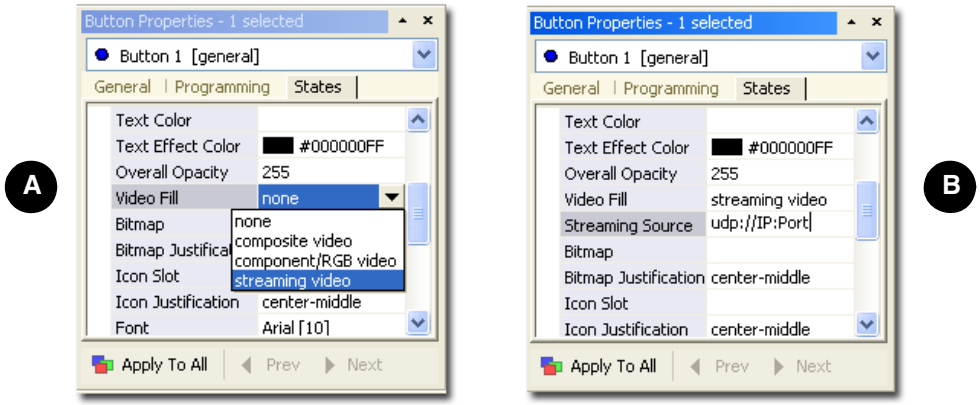

FIG. 134 Video Fill - Button Properties setting

12. Use the *Video Fill* drop-down arrow to select the **Streaming Video** option (**A** in FIG. 134).

13. Within the newly added *Streaming Source* field, enter the Transport Protocol, IP Address of the MAX-CSE, and Target Video Port (**B** in FIG. 134).

- When using a UDP Transport Protocol, enter the following into the *Streaming Source* field: ***udp://IP Address of MAX-CSE:Target Video Port*** set on the UI page.
  - Our example uses: **udp://192.199.99.99:5000**
- Refer to *Step 2: Configuring the MAX-CSE for communication* section on page 172.
  The MAX-CSE is available from either the front LCD (FIG. 135) or from the IP Settings page of the UI.

FIG. 135 Example of the current display

- When using an RTP Transport Protocol, determine whether you are using an MPEG-2 or MPEG-4 stream and enter the following into the *Streaming Source* field:
  rtpmpeg#://IP Address of MAX-CSE:Target Video Port
  - Although our example doesn't use RTP, you could enter the following:
    for MPEG-2 **rtpmpeg2://192.199.99.99:5000**
    for MPEG-4 **rtpmpeg4://192.199.99.99:5000**

NOTE

*Modero doesn't require that an audio port be entered within the Streaming Source field because the firmware already assumes the audio port value to be **2 greater** than the value set for the video port.*

14. Create buttons on both this project's main page and within this Video page which can allow the user to navigate between both pages.
15. Save these pages, and after establishing a connection, upload this project to the target Modero panel.

Step 5: Establishing the final connection between the two units

1. Start playing the media at its source (DVD, VCR, camera, etc.)
2. While in the UI pages (*log back in if not already connected*), navigate to the Administration page by clicking on the **Admin** link from the left Navigation frame.
3. Locate the Mode section of this page and click the **Play** button to begin streaming the incoming media content to the targeted Modero panel. For these procedures, the Program information is optional and not "picked-up" by the panel.
4. With the panel now loaded with the new TPD4 project containing the streaming media page/popup/button, navigate from the initially displayed (main) page to the page containing the Streaming Video Fill button which we created in the previous step. It should now be displaying the audio and video from the incoming stream.
   - If the audio level is not sufficient, you can either go back and create a volume control button or go to the Modero's Audio firmware page and adjust the value assigned to the Master Volume for the panel.
   - If there is no video being displayed on the page:
     - Navigate to the firmware pages by pressing the grey Front Setup Access button for 3 seconds to open the Setup page and then press the on-screen **Video Adjustment** button, causing an option bar to slide outwards from the Navigation buttons.
     - Click on the **Streaming Adjustment** button to launch the Streaming Video Adjustment page and confirm that the panel is at least receiving the signal (FIG. 136).

FIG. 136 Video Adjustment page (showing default values)

- If there is no signal displayed, return to the MAX-CSE UI pages and from the Encoder Profiles page, confirm that the correct panel IP Address and target port where entered into the *Streaming Source* field within the TPDesign4 project.
- If this still doesn't produce a displayed signal, cycle the **Play/Stop** buttons and verify that both the encoding Status says **Streaming** (verifying that the process of encoding is underway) and that the unit is detecting an incoming signal (shown by the word **SYNC** appearing in the Video Sync section of the UI).
- The most common error can result from a bad cable not being detected and therefore no signal becomes available for the unit to encode. The encoding process can continue on a MAX-CSE even without an actual signal being detected.

Programming

You can program the touch panel, using the commands in this section, to perform a wide variety of operations using Send_Commands and variable text commands.

A device must first be defined in the NetLinx programming language with values for the Device: Port: System (in all programming examples - ***Panel*** is used in place of these values and represents all Modero panels).

WARNING

Verify you are using the latest NetLinx Master and Modero touch panel firmware.
Verify you are also using the latest version of TPDesign4.

Button Assignments

- Button Channel Range: 1 - 4000 Button push and Feedback (per address port)
- Button Variable Text range: 1 - 4000 (per address port)
- Button States Range: 1 - 256
  (0 = All states, for General buttons 1 = Off state and 2 = On state).
- Level Range: 1 - 600 (Default level value 0 - 255, can be set up to 1 - 65535)
- Address port Range: 1 - 100

NOTE

These button assignments can only be adjusted in TPD4 and not on the panels themselves.

Page Commands

These Page Commands are used in NetLinx Programming Language and are case insensitive.

Page Commands	

@APG
Add a specific popup page to a specified popup group.
	Add the popup page to a group if it does not already exist. If the new popup is added to a group which has a popup displayed on the current page along with the new pop-up, the displayed popup will be hidden and the new popup will be displayed.
	Syntax:
	`"'@APG-<popup page name>;<popup group name>'"`
	Variable:
	popup page name = 1 - 50 ASCII characters. Name of the popup page.
	popup group name = 1 - 50 ASCII characters. Name of the popup group.
	Example:
	`SEND_COMMAND Panel,"'@APG-Popup1;Group1'"`
	Adds the popup page 'Popup1' to the popup group 'Group1'.

@CPG
Clear all popup pages from specified popup group.
	Syntax:
	`"'@CPG-<popup group name>'"`
	Variable:
	popup group name = 1 - 50 ASCII characters. Name of the popup group.
	Example:
	`SEND_COMMAND Panel,"'@CPG-Group1'"`
	Clears all popup pages from the popup group 'Group1'.

Page Commands (Cont.)	

@DPG
Delete a specific popup page from specified popup group if it exists.
	Syntax:
	`"'@DPG-<popup page name>;<popup group name>'"`
	Variable:
	popup page name = 1 - 50 ASCII characters. Name of the popup page.
	popup group name = 1 - 50 ASCII characters. Name of the popup group.
	Example:
	`SEND_COMMAND Panel,"'@DPG-Popup1;Group1'"`
	Deletes the popup page 'Popup1' from the popup group 'Group1'.

@PDR
Set the popup location reset flag.
	If the flag is set, the popup will return to its default location on show instead of its last drag location.
	Syntax:
	`"'@PDR-<popup page name>;<reset flag>'"`
	Variable:
	popup page name = 1 - 50 ASCII characters. Name of the page the popup is displayed On.
	reset flag = 1 = Enable reset flag
	0 = Disable reset flag
	Example:
	`SEND_COMMAND Panel,"'@PDR-Popup1;1'"`
	Popup1 will return to its default location when turned On.

@PHE
Set the hide effect for the specified popup page to the named hide effect.
	Syntax:
	`"'@PHE-<popup page name>;<hide effect name>'"`
	Variable:
	popup page name = 1 - 50 ASCII characters. Name of the page the popup is displayed On.
	hide effect name = Refers to the popup effect names being used.
	Example:
	`SEND_COMMAND Panel,"'@PHE-Popup1;Slide to Left'"`
	Sets the Popup1 hide effect name to 'Slide to Left'.

@PHP
Set the hide effect position.
	Only 1 coordinate is ever needed for an effect, however, the command will specify both. This command sets the location at which the effect will end at.
	Syntax:
	`"'@PHP-<popup page name>;<x coordinate>,<y coordinate>'"`
	Variable:
	popup page name = 1 - 50 ASCII characters. Name of the page the popup is displayed On.
	Example:
	`SEND_COMMAND Panel,"'@PHP-Popup1;75,0'"`
	Sets the Popup1 hide effect x-coordinate value to 75 and the y-coordinate value to 0.

@PHT
Set the hide effect time for the specified popup page.
	Syntax:
	`"'@PHT-<popup page name>;<hide effect time>'"`
	Variable:
	popup page name = 1 - 50 ASCII characters. Name of the page the popup is displayed On.
	hide effect time = Given in 1/10ths of a second.
	Example:
	`SEND_COMMAND Panel,"'@PHT-Popup1;50'"`
	Sets the Popup1 hide effect time to 5 seconds.

Page Commands (Cont.)	

@PPA
Close all popups on a specified page.
	If the page name is empty, the current page is used. Same as the 'Clear Page' command in TPDesign4.
	Syntax:
	`"'@PPA-<page name>'"`
	Variable:
	page name = 1 - 50 ASCII characters. Name of the page the popup is displayed On.
	Example:
	`SEND_COMMAND Panel,"'@PPA-Page1'"`
	Close all popups on Page1.

@PPF
Deactivate a specific popup page on either a specified page or the current page.
	If the page name is empty, the current page is used (see example 2). If the popup page is part of a group, the whole group is deactivated. This command works in the same way as the 'Hide Popup' command in TPDesign4.
	Syntax:
	`"'@PPF-<popup page name>;<page name>'"`
	Variable:
	popup page name = 1 - 50 ASCII characters. Name of the popup page.
	page name = 1 - 50 ASCII characters. Name of the page the popup is displayed On.
	Example:
	`SEND_COMMAND Panel,"'@PPF-Popup1;Main'"`
	Deactivates the popup page 'Popup1' on the Main page.
	Example 2:
	`SEND_COMMAND Panel,"'@PPF-Popup1'"`
	Deactivates the popup page 'Popup1' on the current page.

@PPG
Toggle a specific popup page on either a specified page or the current page.
	If the page name is empty, the current page is used (see example 2). Toggling refers to the activating/deactivating (On/Off) of a popup page. This command works in the same way as the 'Toggle Popup' command in TPDesign4.
	Syntax:
	`"'@PPG-<popup page name>;<page name>'"`
	Variable:
	popup page name = 1 - 50 ASCII characters. Name of the popup page.
	page name = 1 - 50 ASCII characters. Name of the page the popup is displayed On.
	Example:
	`SEND_COMMAND Panel,"'@PPG-Popup1;Main'"`
	Toggles the popup page 'Popup1' on the 'Main' page from one state to another (On/Off).
	Example 2:
	`SEND_COMMAND Panel,"'@PPG-Popup1'"`
	Toggles the popup page 'Popup1' on the current page from one state to another (On/Off).

@PPK
Kill a specific popup page from all pages.
	Kill refers to the deactivating (Off) of a popup window from all pages. If the pop-up page is part of a group, the whole group is deactivated. This command works in the same way as the 'Clear Group' command in TPDesign 4.
	Syntax:
	`"'@PPK-<popup page name>'"`
	Variable:
	popup page name = 1 - 50 ASCII characters. Name of the popup page.
	Example:
	`SEND_COMMAND Panel,"'@PPK-Popup1'"`
	Kills the popup page 'Popup1' on all pages.

Page Commands (Cont.)	

@PPM
Set the modality of a specific popup page to Modal or NonModal.
	A Modal popup page, when active, only allows you to use the buttons and features on that popup page. All other buttons on the panel page are inactivated.
	Syntax:
	`"'@PPM-<popup page name>;<mode>'"`
	Variable:
	popup page name = 1 - 50 ASCII characters. Name of the popup page.
	mode = NONMODAL converts a previously Modal popup page to a NonModal.
	MODAL converts a previously NonModal popup page to Modal.
	modal = 1 and non-modal = 0
	Example:
	`SEND_COMMAND Panel,"'@PPM-Popup1;Modal'"`
	Sets the popup page 'Popup1' to Modal.
	`SEND_COMMAND Panel,"'@PPM-Popup1;1'"`
	Sets the popup page 'Popup1' to Modal.

@PPN
Activate a specific popup page to launch on either a specified page or the current page.
	If the page name is empty, the current page is used (see example 2). If the popup page is already on, do not re-draw it. This command works in the same way as the 'Show Popup' command in TPDesign4.
	Syntax:
	`"'@PPN-<popup page name>;<page name>'"`
	Variable:
	popup page name = 1 - 50 ASCII characters. Name of the popup page.
	page name = 1 - 50 ASCII characters. Name of the page the popup is displayed On.
	Example:
	`SEND_COMMAND Panel,"'@PPN-Popup1;Main'"`
	Activates 'Popup1' on the 'Main' page.
	Example 2:
	`SEND_COMMAND Panel,"'@PPN-Popup1'"`
	Activates the popup page 'Popup1' on the current page.

@PPT
Set a specific popup page to timeout within a specified time.
	If timeout is empty, popup page will clear the timeout.
	Syntax:
	`"'@PPT-<popup page name>;<timeout>'"`
	Variable:
	popup page name = 1 - 50 ASCII characters. Name of the popup page.
	timeout = Timeout duration in 1/10ths of a second.
	Example:
	`SEND_COMMAND Panel,"'@PPT-Popup1;30'"`
	Sets the popup page 'Popup1' to timeout within 3 seconds.

@PPX
Close all popups on all pages.
	This command works in the same way as the 'Clear All' command in TPDesign 4.
	Syntax:
	`"'@PPX'"`
	Example:
	`SEND_COMMAND Panel,"'@PPX'"`
	Close all popups on all pages.

Page Commands (Cont.)	

@PSE
Set the show effect for the specified popup page to the named show effect.
	Syntax:
	`"'@PSE-<popup page name>;<show effect name>'"`
	Variable:
	popup page name = 1 - 50 ASCII characters. Name of the page the popup is displayed On.
	show effect name = Refers to the popup effect name being used.
	Example:
	`SEND_COMMAND Panel,"'@PSE-Popup1;Slide from Left'"`
	Sets the Popup1 show effect name to 'Slide from Left'.

@PSP
Set the show effect position.
	Only 1 coordinate is ever needed for an effect; however, the command will specify both. This command sets the location at which the effect will begin at.
	Syntax:
	`"'@PSP-<popup page name>;<x coordinate>,<y coordinate>'"`
	Variable:
	popup page name = 1 - 50 ASCII characters. Name of the page the popup is displayed On.
	Example:
	`SEND_COMMAND Panel,"'@PSP-Popup1;100,0'"`
	Sets the Popup1 show effect x-coordinate value to 100 and the y-coordinate value to 0.

@PST
Set the show effect time for the specified popup page.
	Syntax:
	`"'@PST-<popup page name>;<show effect time>'"`
	Variable:
	popup page name = 1 - 50 ASCII characters. Name of the page the popup is displayed On.
	show effect time = Given in 1/10ths of a second.
	Example:
	`SEND_COMMAND Panel,"'@PST-Popup1;50'"`
	Sets the Popup1 show effect time to 5 seconds.

PAGE
Flip to a specified page.
	Flips to a page with a specified page name. If the page is currently active, it will not redraw the page.
	Syntax:
	`"'PAGE-<page name>'"`
	Variable:
	page name = 1 - 50 ASCII characters. Name of the page the popup is displayed On.
	Example:
	`SEND_COMMAND Panel,"'PAGE-Page1'"`
	Flips to page1.

Page Commands (Cont.)	

PPOF
Deactivate a specific popup page on either a specified page or the current page.
	If the page name is empty, the current page is used (see example 2). If the popup page is part of a group, the whole group is deactivated. This command works in the same way as the 'Hide Popup' command in TPDesign4.
	Syntax:
	`"'PPOF-<popup page name>;<page name>'"`
	Variable:
	popup page name = 1 - 50 ASCII characters. Name of the popup page.
	page name = 1 - 50 ASCII characters. Name of the page the popup is displayed On.
	Example:
	`SEND_COMMAND Panel,"'PPOF-Popup1;Main'"`
	Deactivates the popup page 'Popup1' on the Main page.
	Example 2:
	`SEND_COMMAND Panel,"'PPOF-Popup1'"`
	Deactivates the popup page 'Popup1' on the current page.

PPOG
Toggle a specific popup page on either a specified page or the current page.
	If the page name is empty, the current page is used (see example 2). Toggling refers to the activating/deactivating (On/Off) of a popup page. This command works in the same way as the 'Toggle Popup' command in TPDesign4.
	Syntax:
	`"'PPOG-<popup page name>;<page name>'"`
	Variable:
	popup page name = 1 - 50 ASCII characters. Name of the popup page.
	page name = 1 - 50 ASCII characters. Name of the page the popup is displayed On.
	Example:
	`SEND_COMMAND Panel,"'PPOG-Popup1;Main'"`
	Toggles the popup page 'Popup1' on the Main page from one state to another (On/Off).
	Example 2:
	`SEND_COMMAND Panel,"'PPOG-Popup1'"`
	Toggles the popup page 'Popup1' on the current page from one state to another (On/Off).

PPON
Activate a specific popup page to launch on either a specified page or the current page.
	If the page name is empty, the current page is used (see example 2). If the popup page is already On, do not re-draw it. This command works in the same way as the 'Show Popup' command in TPDesign4.
	Syntax:
	`"'PPON-<popup page name>;<page name>'"`
	Variable:
	popup page name = 1 - 50 ASCII characters. Name of the popup page.
	page name = 1 - 50 ASCII characters. Name of the page the popup is displayed On.
	Example:
	`SEND_COMMAND Panel,"'PPON-Popup1; Main'"`
	Activates the popup page 'Popup1' on the Main page.
	Example 2:
	`SEND_COMMAND Panel,"'PPON-Popup1'"`
	Activates the popup page 'Popup1' on the current page.

Programming Numbers

The following information provides the programming numbers for colors, fonts, and borders.

Colors can be used to set the colors on buttons, sliders, and pages. The lowest color number represents the lightest color-specific display; the highest number represents the darkest display.
For example, 0 represents light red, and 5 is dark red.

RGB triplets and names for basic 88 colors

RGB Values for all 88 Basic Colors				
Index No.	Name	Red	Green	Blue
00	Very Light Red	255	0	0
01	Light Red	223	0	0
02	Red	191	0	0
03	Medium Red	159	0	0
04	Dark Red	127	0	0
05	Very Dark Red	95	0	0
06	Very Light Orange	255	128	0
07	Light Orange	223	112	0
08	Orange	191	96	0
09	Medium Orange	159	80	0
10	Dark Orange	127	64	0
11	Very Dark Orange	95	48	0
12	Very Light Yellow	255	255	0
13	Light Yellow	223	223	0
14	Yellow	191	191	0
15	Medium Yellow	159	159	0
16	Dark Yellow	127	127	0
17	Very Dark Yellow	95	95	0
18	Very Light Lime	128	255	0
19	Light Lime	112	223	0
20	Lime	96	191	0
21	Medium Lime	80	159	0
22	Dark Lime	64	127	0
23	Very Dark Lime	48	95	0
24	Very Light Green	0	255	0
25	Light Green	0	223	0
26	Green	0	191	0
27	Medium Green	0	159	0
28	Dark Green	0	127	0
29	Very Dark Green	0	95	0
30	Very Light Mint	0	255	128
31	Light Mint	0	223	112
32	Mint	0	191	96
33	Medium Mint	0	159	80
34	Dark Mint	0	127	64
35	Very Dark Mint	0	95	48

RGB Values for all 88 Basic Colors (Cont.)				
Index No.	Name	Red	Green	Blue
36	Very Light Cyan	0	255	255
37	Light Cyan	0	223	223
38	Cyan	0	191	191
39	Medium Cyan	0	159	159
40	Dark Cyan	0	127	127
41	Very Dark Cyan	0	95	95
42	Very Light Aqua	0	128	255
43	Light Aqua	0	112	223
44	Aqua	0	96	191
45	Medium Aqua	0	80	159
46	Dark Aqua	0	64	127
47	Very Dark Aqua	0	48	95
48	Very Light Blue	0	0	255
49	Light Blue	0	0	223
50	Blue	0	0	191
51	Medium Blue	0	0	159
52	Dark Blue	0	0	127
53	Very Dark Blue	0	0	95
54	Very Light Purple	128	0	255
55	Light Purple	112	0	223
56	Purple	96	0	191
57	Medium Purple	80	0	159
58	Dark Purple	64	0	127
59	Very Dark Purple	48	0	95
60	Very Light Magenta	255	0	255
61	Light Magenta	223	0	223
62	Magenta	191	0	191
63	Medium Magenta	159	0	159
64	Dark Magenta	127	0	127
65	Very Dark Magenta	95	0	95
66	Very Light Pink	255	0	128
67	Light Pink	223	0	112
68	Pink	191	0	96
69	Medium Pink	159	0	80
70	Dark Pink	127	0	64
71	Very Dark Pink	95	0	48
72	White	255	255	255
73	Grey1	238	238	238
74	Grey3	204	204	204
75	Grey5	170	170	170
76	Grey7	136	136	136
77	Grey9	102	102	102
78	Grey4	187	187	187
79	Grey6	153	153	153

RGB Values for all 88 Basic Colors (Cont.)				
Index No.	Name	Red	Green	Blue
80	Grey8	119	119	119
81	Grey10	85	85	85
82	Grey12	51	51	51
83	Grey13	34	34	34
84	Grey2	221	221	221
85	Grey11	68	68	68
86	Grey14	17	17	17
87	Black	0	0	0
255	TRANSPARENT	99	53	99

Font styles and ID numbers

Font styles can be used to program the text fonts on buttons, sliders, and pages. The following chart shows the default font type and their respective ID numbers generated by TPDesign4.

Default Font Styles and ID Numbers						
Font ID #	Font type	Size		Font ID #	Font type	Size
1	Courier New	9		19	Arial	9
2	Courier New	12		20	Arial	10
3	Courier New	18		21	Arial	12
4	Courier New	26		22	Arial	14
5	Courier New	32		23	Arial	16
6	Courier New	18		24	Arial	18
7	Courier New	26		25	Arial	20
8	Courier New	34		26	Arial	24
9	AMX Bold	14		27	Arial	36
10	AMX Bold	20		28	Arial Bold	10
11	AMX Bold	36		29	Arial Bold	8
				32 - Variable Fonts start at 32.		

NOTE

You must import fonts into a TPDesign4 project file. The font ID numbers are assigned by TPDesign4. These values are also listed in the ***Generate Programmer's Report****.*

Border styles

The TPDesign4 Touch Panel Design program has pre-set border styles that are user selectable. TPD4 border styles can ONLY be changed by using the name.

TPD4 Border Styles by Name	
Border styles	Border styles
None	Diamond 55
AMX Elite -L	Diamond 65
AMX Elite -M	Diamond 75
AMX Elite -S	Double Bevel -L
Bevel -L	Double Bevel -M
Bevel -M	Double Bevel -S
Bevel -S	Double Line
Circle 15	Fuzzy
Circle 25	Glow-L
Circle 35	Help Down
Circle 45	Help Down Reversed
Circle 55	Menu Bottom Rounded 15
Circle 65	Menu Bottom Rounded 25
Circle 75	Menu Bottom Rounded 35
Circle 85	Menu Bottom Rounded 45
Circle 95	Menu Bottom Rounded 55
Circle 105	Menu Bottom Rounded 65
Circle 115	Menu Bottom Rounded 75
Circle 125	Menu Bottom Rounded 85
Circle 135	Menu Bottom Rounded 95
Circle 145	Menu Bottom Rounded 105
Circle 155	Menu Bottom Rounded 115
Circle 165	Menu Bottom Rounded 125
Circle 175	Menu Bottom Rounded 135
Circle 185	Menu Bottom Rounded 145
Circle 195	Menu Bottom Rounded 155
Cursor Bottom	Menu Bottom Rounded 165
Cursor Bottom with Hole	Menu Bottom Rounded 175
Cursor Top	Menu Bottom Rounded 185
Cursor Top with Hole	Menu Bottom Rounded 195
Cursor Left	Menu Left Rounded 15
Cursor Left with Hole	Menu Left Rounded 25
Cursor Right	Menu Left Rounded 35
Cursor Right with Hole	Menu Left Rounded 45
Custom Frame	Menu Left Rounded 55
Diamond 15	Menu Left Rounded 65
Diamond 25	Menu Left Rounded 75
Diamond 35	Menu Left Rounded 85
Diamond 45	Menu Left Rounded 95

TPD4 Border Styles by Name (Cont.)	
Border styles	Border styles
Menu Left Rounded 105	Menu Top Rounded 65
Menu Left Rounded 115	Menu Top Rounded 75
Menu Left Rounded 125	Menu Top Rounded 85
Menu Left Rounded 135	Menu Top Rounded 95
Menu Left Rounded 145	Menu Top Rounded 105
Menu Left Rounded 155	Menu Top Rounded 115
Menu Left Rounded 165	Menu Top Rounded 125
Menu Left Rounded 175	Menu Top Rounded 135
Menu Left Rounded 185	Menu Top Rounded 145
Menu Left Rounded 195	Menu Top Rounded 155
Menu Right Rounded 15	Menu Top Rounded 165
Menu Right Rounded 25	Menu Top Rounded 175
Menu Right Rounded 35	Menu Top Rounded 185
Menu Right Rounded 45	Menu Top Rounded 195
Menu Right Rounded 55	Neon Active -L
Menu Right Rounded 65	Neon Active -S
Menu Right Rounded 75	Neon Inactive -L
Menu Right Rounded 85	Neon Inactive -S
Menu Right Rounded 95	Oval V 30x60
Menu Right Rounded 105	Oval V 50x100
Menu Right Rounded 115	Oval V 75x150
Menu Right Rounded 125	Oval V 100x200
Menu Right Rounded 135	Oval H 60x30
Menu Right Rounded 145	Oval H 100x50
Menu Right Rounded 155	Oval H 150x75
Menu Right Rounded 165	Oval H 200x100
Menu Right Rounded 175	Picture Frame
Menu Right Rounded 185	Quad Line
Menu Right Rounded 195	Single Line
Menu Rounded Spacer - Vertical	Windows Style Popup
Menu Rounded Spacer - Horizontal	Windows Style Popup (Status Bar)
Menu Top Rounded 55	

"^" Button Commands

These Button Commands are used in NetLinx Studio and are case insensitive.

All commands that begin with "^" have the capability of assigning a variable text address range and button state range. **A device must first be defined in the NetLinx programming language with values for the Device: Port : System** (in all programming examples - ***Panel*** is used in place of these values).

- **Variable text ranges** allow you to target 1 or more variable text channels in a single command.
- **Button State ranges** allow you to target 1 or more states of a variable text button with a single command.
- **":"** Character is used for the 'through' notation, also the "**&**" character is used for the 'And' notation.

"^" Button Commands	

^ANI
Run a button animation (in 1/10 second).
	Syntax:
	`"'^ANI-<vt addr range>,<start state>,<end state>,<time>'"`
	Variable:
	variable text address range = 1 - 4000.
	start state = Beginning of button state (0= current state).
	end state = End of button state.
	time = In 1/10 second intervals.
	Example:
	`SEND_COMMAND Panel,"'^ANI-500,1,25,100'"`
	Runs a button animation at text range 500 from state 1 to state 25 for 10 second.

^APF
Add page flip action to a button if it does not already exist.
	Syntax:
	`"'^APF-<vt addr range>,<page flip action>,<page name>'"`
	Variable:
	variable text address range = 1 - 4000.
	page flip action = **Stan**[dardPage] - Flip to standard page
	Prev[iousPage] - Flip to previous page
	Show[Popup] - Show Popup page
	Hide[Popup] - Hide Popup page
	Togg[lePopup] - Toggle popup state
	ClearG[roup] - Clear popup page group from all pages
	ClearP[age] - Clear all popup pages from a page with the specified page name
	ClearA[ll] - Clear all popup pages from all pages
	page name = 1 - 50 ASCII characters.
	Example:
	`SEND COMMAND Panel,"'^APF-400,Stan,Main Page'"`
	Assigns a button to a standard page flip with page name 'Main Page'.

"^" Button Commands (Cont.)	

^BAT
Append non-unicode text.
	Syntax:
	`"'^BAT-<vt addr range>,<button states range>,<new text>'"`
	Variable:
	variable text address range = 1 - 4000.
	button states range = 1 - 256 for multi-state buttons (0 = All states, for General buttons 1 = Off state and 2 = On state).
	new text = 1 - 50 ASCII characters.
	Example:
	`SEND_COMMAND Panel,"'^BAT-520,1,Enter City'"`
	Appends the text 'Enter City' to the button's OFF state.

^BAU
Append unicode text.
	Same format as ^UNI.
	Syntax:
	`"'^BAU-<vt addr range>,<button states range>,<unicode text>'"`
	Variable:
	variable text address range = 1 - 4000.
	button states range = 1 - 256 for multi-state buttons (0 = All states, for General buttons 1 = Off state and 2 = On state).
	unicode text = 1 - 50 ASCII characters. Unicode characters must be entered in Hex format.
	Example:
	`SEND_COMMAND Panel,"'^BAU-520,1,00770062'"`
	Appends Unicode text '00770062' to the button's OFF state.

^BCB
Set the border color to the specified color.
	Only if the specified border color is not the same as the current color.
	Note: Color can be assigned by color name (without spaces), number or R,G,B value (RRGGBB or RRGGBBAA).
	Syntax:
	`"'^BCB-<vt addr range>,<button states range>,<color value>'"`
	Variable:
	variable text address range = 1 - 4000.
	button states range = 1 - 256 for multi-state buttons (0 = All states, for General buttons 1 = Off state and 2 = On state).
	color value = Refer to theRGB Values for all 88 Basic Colors table on page 185 for more information.
	Example:
	`SEND_COMMAND Panel,"'^BCB-500.504&510,1,12'"`
	Sets the Off state border color to 12 (Yellow). Colors can be set by Color Numbers, Color name, R,G,B,alpha colors (RRGGBBAA) and R, G & B colors values (RRGGBB). Refer to theRGB Values for all 88 Basic Colors table on page 185.

"^" Button Commands (Cont.)	

^BCF
Set the fill color to the specified color.
	Only if the specified fill color is not the same as the current color.
	Note: Color can be assigned by color name (without spaces), number or R,G,B value (RRGGBB or RRGGBBAA).
	Syntax:
	`"'^BCF-<vt addr range>,<button states range>,<color value>'"`
	Variable:
	variable text address range = 1 - 4000.
	button states range = 1 - 256 for multi-state buttons (0 = All states, for General buttons 1 = Off state and 2 = On state).
	color value = Refer to theRGB Values for all 88 Basic Colors table on page 185 for more information.
	Example:
	`SEND_COMMAND Panel,"'^BCF-500.504&510.515,1,12'"`
	`SEND_COMMAND Panel,"'^BCF-500.504&510.515,1,Yellow'"`
	`SEND_COMMAND Panel,"'^BCF-500.504&510.515,1,#F4EC0A63'"`
	`SEND_COMMAND Panel,"'^BCF-500.504&510.515,1,#F4EC0A'"`
	Sets the Off state fill color by color number. Colors can be set by Color Numbers, Color name, R,G,B,alpha colors (RRGGBBAA) and R, G & B colors values (RRGGBB).

^BCT
Set the text color to the specified color.
	Only if the specified text color is not the same as the current color.
	Note: Color can be assigned by color name (without spaces), number or R,G,B value (RRGGBB or RRGGBBAA).
	Syntax:
	`"'^BCT-<vt addr range>,<button states range>,<color value>'"`
	Variable:
	variable text address range = 1 - 4000.
	button states range = 1 - 256 for multi-state buttons (0 = All states, for General buttons 1 = Off state and 2 = On state).
	color value = Refer to theRGB Values for all 88 Basic Colors table on page 185 for more information.
	Example:
	`SEND_COMMAND Panel,"'^BCT-500.504&510,1,12'"`
	Sets the Off state border color to 12 (Yellow). Colors can be set by Color Numbers, Color name, R,G,B,alpha colors (RRGGBBAA) and R, G & B colors values (RRGGBB).

"^" Button Commands (Cont.)	

^BDO
Set the button draw order.
	Determines what order each layer of the button is drawn.
	Syntax:
	`"'^BDO-<vt addr range>,<button states range>,<1-5><1-5><1-5><1-5><1-5>'"`
	Variable:
	variable text address range = 1 - 4000.
	button states range = 1 - 256 for multi-state buttons (0 = All states, for General buttons 1 = Off state and 2 = On state).
	layer assignments = Fill Layer = 1
	Image Layer = 2
	Icon Layer = 3
	Text Layer = 4
	Border Layer = 5
	***Note**: The layer assignments are from bottom to top. The default draw order is* **12345**.
	Example:
	`SEND_COMMAND Panel,"'^BDO-530,1&2,51432'"`
	Sets the button's variable text 530 ON/OFF state draw order (from bottom to top) to Border, Fill, Text, Icon, and Image.
	Example 2:
	`SEND_COMMAND Panel,"'^BDO-1,0,12345'"`
	Sets all states of a button back to its default drawing order.

^BFB
Set the feedback type of the button.
	ONLY works on General-type buttons.
	Syntax:
	`"'^BFB-<vt addr range>,<feedback type>'"`
	Variable:
	variable text address range = 1 - 4000.
	feedback type = (None, Channel, Invert, On (Always on), Momentary, and Blink).
	Example:
	`SEND_COMMAND Panel,"'^BFB-500,Momentary'"`
	Sets the Feedback type of the button to 'Momentary'.

"^" Button Commands (Cont.)	

^BIM
Set the input mask for the specified address.
	Syntax:
	`"'^BIM-<vt addr range>,<input mask>'"`
	Variable:
	variable text address range = 1 - 4000.
	input mask = Refer to the *Text Area Input Masking* section on page 236 for character types.
	Example:
	`SEND_COMMAND Panel,"'^BIM-500,AAAAAAAAAA'"`
	Sets the input mask to ten 'A' characters, that are required, to either a letter or digit **(entry is required).**

^BLN
Set the number of lines removed equally from the top and bottom of a composite video signal.
	The maximum number of lines to remove is 240. A value of 0 will display the incoming video signal unaffected. This command is used to scale non 4x3 video images into non 4x3 video buttons.
	Syntax:
	`"'^BLN-<vt addr range>,<button states range>,<number of lines>'"`
	Variable:
	variable text address range = 1 - 4000.
	button states range = 1 - 256 for multi-state buttons (0 = All states, for General buttons 1 = Off state and 2 = On state).
	number of lines = 0 - 240.
	Example:
	`SEND_COMMAND Panel,"'^BLN-500,55'"`
	Equally removes 55 lines from the top and 55 lines from the bottom of the video button.

"^" Button Commands (Cont.)	

^BMC
Button copy command.
Copy attributes of the source button to all the destination buttons.
	Note that the source is a single button state. Each state must be copied as a separate command. The <codes> section represents what attributes will be copied. All codes are 2 char pairs that can be separated by comma, space, percent or just ran together.
	Syntax:
	`"'^BMC-<vt addr range>,<button states range>,<source port>,<source address>,<source state>,<codes>'"`
	Variable:
	variable text address range = 1 - 4000.
	button states range = 1 - 256 for multi-state buttons (0 = All states, for General buttons 1 = Off state and 2 = On state).
	source port = 1 - 100
	source address = 1 - 4000
	source state = 1 - 256
	codes: BM - Picture/Bitmap
	BR - Border
	CB - Border Color
	CF - Fill Color
	CT - Text Color
	EC - Text effect color
	EF - Text effect
	FT - Font
	IC - Icon
	JB - Bitmap alignment
	JI - Icon alignment
	JT - Text alignment
	LN - Lines of video removed
	OP - Opacity
	SO - Button Sound
	TX - Text
	VI - Video slot ID
	WW - Word wrap on/off
	Example:
	`SEND_COMMAND Panel,"'^BMC-425,1,1,500,1,BR'"`
	or
	`SEND_COMMAND Panel,"'^BMC-425,1,1,500,1,%BR'"`
	Copies the OFF state border of button with a variable text address of 500 onto the OFF state border of button with a variable text address of 425.
	Example 2:
	`SEND_COMMAND Panel,"'^BMC-150,1,1,315,1,%BR%FT%TX%BM%IC%CF%CT'"`
	Copies the OFF state border, font, Text, bitmap, icon, fill color and text color of the button with a variable text address of 315 onto the OFF state border, font, Text, bitmap, icon, fill color and text color of the button with a variable text address of 150.

"^" Button Commands (Cont.)	
^BMF Set any/all button parameters by sending embedded codes and data.	Syntax: `"'^BMF-<vt addr range>,<button states range>,<data>'"` Variables: variable text address char array = 1 - 4000. button states range = 1 - 256 for multi-state buttons (0 = All states, for General buttons 1 = Off state and 2 = On state). level range = 1 - 600 (level value is 1 - 65535). data: '%B<border style>' = Set the border style name. See theTPD4 Border Styles by Name table on page 188. '%B',<border 0-27,40,41> = Set the borer style number. See theTPD4 Border Styles by Name table on page 188. '%DO<1-5><1-5><1-5><1-5><1-5> = Set the draw order. Listed from bottom to top. Refer to the ^BDO command on page 193 for more information. '%F',<font 1-8,10,11,20-29,32-xx> = Set the font. See theDefault Font Styles and ID Numbers table on page 187. '%F<font 01-08,10,11,20-29,32-xx>' = Set the font. See theDefault Font Styles and ID Numbers table on page 187. '%MI<mask image>' = Set the mask image. Refer to the ^BMI command on page 198 for more information. '%T<text >' = Set the text using ASCII characters (empty is clear). '%P<bitmap>' = Set the picture/bitmap filename (empty is clear). '%I',<icon 01-9900, 0-clear>' = Set the icon using values of 01 - 9900 (icon numbers are assigned in the TPDesign4 Resource Manager tab - Slots section). '%I<icon 01-9900, 0-clear>' = Set the icon using values of 01 - 9900 (icon numbers are assigned in the TPDesign4 Resource Manager tab - Slots section). '%J',<alignment of text 1-9> = As shown the following telephone keypad alignment chart: 0 1 2 3 4 5 6 7 8 9 Zero can be used for an absolute position '%JT<alignment of text 0-9>' = As shown the above telephone keypad alignment chart, **BUT** the 0 (zero) is absolute and followed by **',<left>,<top>'** '%JB<alignment of bitmap/picture 0-9>' = As shown the above telephone keypad alignment chart BUT the 0 (zero) is absolute and followed by **',<left>,<top>'** '%JI<alignment of icon 0-9>' = As shown the above telephone keypad alignment chart, **BUT** the 0 (zero) is absolute and followed by **',<left>,<top>'**

"^" Button Commands (Cont.)	
^BMF (Cont.)	*For some of these commands and values, refer to* theRGB Values for all 88 Basic Colors table on page 185. '%CF<on fill color>' = Set Fill Color. '%CB<on border color>' = Set Border Color. '%CT<on text color>' = Set Text Color. '%SW<1 or 0>' = Show/hide a button. '%SO<sound>' = Set the button sound. '%EN<1 or 0>' = Enable/disable a button. '%WW<1 or 0>' = Word wrap On/Off. '%GH<bargraph hi>' = Set the bargraph upper limit. '%GL<bargraph low>' = Set the bargraph lower limit. '%GN<bargraph slider name>' = Set the bargraph slider name/Joystick cursor name. '%GC<bargraph slider color>' = Sets the bargraph slider color/Joystick cursor color. '%GI<bargraph invert>' = Set the bargraph invert/noninvert or joystick coordinate (0,1,2,3). ^*GIV* section on page 204 more information. '%GU<bargraph ramp up>' = Set the bargraph ramp up time in intervals of 1/10 second. '%GD<bargraph ramp down>' = Set the bargraph ramp down time in 1/10 second. '%GG<bargraph drag increment> = Set the bargraph drag increment. Refer to the ^GDI command on page 204 for more information. '%VI<video On/Off>' = Set the Video either On (value=1) or Off (value=0). '%OT<feedback type>' = Set the Feedback (Output) Type to one of the following: None, Channel,Invert, On (AlwaysOn), Momentary, or Blink. '%SM' = Submit a text for text area button. '%SF<1 or 0>' = Set the focus for text area button. '%OP<0-255>' = Set the button opacity to either Invisible (value=0) or Opaque (value=255). '%OP#<00-FF>' = Set the button opacity to either Invisible (value=00) or Opaque (value=FF). '%UN<Unicode text>' = Set the Unicode text. See the^*UNI* section on page 210 for the text format. '%LN<0-240>' = Set the lines of video being removed. See the^*BLN* section on page 194 for more information. '%EF<text effect name>' = Set the text effect. '%EC<text effect color>' = Set the text effect color. '%ML<max length>' = Set the maximum length of a text area. '%MK<input mask>' = Set the input mask of a text area. '%VL<0-1>' = Log-On/Log-Off the computer control connection '%VN<network name>' = Set network connection name. '%VP<password>' = Set the network connection password. Example: `SEND_COMMAND Panel,"'^BMF-500,1,%B10%CFRed%CB Blue %CTBlack%Ptest.png'"` Sets the button OFF state as well as the Border, Fill Color, Border Color, Text Color, and Bitmap.

"^" Button Commands (Cont.)	

^BMI
Set the button mask image.
	Mask image is used to crop a borderless button to a non-square shape. This is typically used with a bitmap.
	Syntax:
	`"'^BMI-<vt addr range>,<button states range>,<mask image>'"`
	Variable:
	variable text address range = 1 - 4000.
	button states range = 1 - 256 for multi-state buttons (0 = All states, for General buttons 1 = Off state and 2 = On state).
	mask image = Graphic file used.
	Example:
	`SEND_COMMAND Panel,"'^BMI-530,1&2,newMac.png'"`
	Sets the button with variable text 530 ON/OFF state mask image to 'newmac.png'.

^BML
Set the maximum length of the text area button.
	If this value is set to zero (0) there is no max length. The maximum length available is 2000. This is only for a Text area input button and not for a Text area input masking button.
	Syntax:
	`"'^BML-<vt addr range>,<max length>'"`
	Variable:
	variable text address range = 1 - 4000.
	max length = 2000 (0=no max length).
	Example:
	`SEND_COMMAND Panel,"'^BML-500,20'"`
	Sets the maximum length of the text area input button to 20 characters.

^BMP
Assign a picture to those buttons with a defined address range.
	Syntax:
	`"'^BMP-<vt addr range>,<button states range>,<name of bitmap/picture>'"`
	Variable:
	variable text address range = 1 - 4000.
	button states range = 1 - 256 for multi-state buttons (0 = All states, for General buttons 1 = Off state and 2 = On state).
	name of bitmap/picture = 1 - 50 ASCII characters.
	Example:
	`SEND_COMMAND Panel,"'^BMP-500.504&510.515,1,bitmap.png'"`
	Sets the OFF state picture for the buttons with variable text ranges of 500-504 & 510-515.

^BNC
Clear current TakeNote annotations.
	Syntax:
	`"'^BNC-<vt addr range>,<command value>'"`
	Variable:
	variable text address range = 1 - 4000.
	command value = (0= clear, 1= clear all).
	Example:
	`SEND_COMMAND Panel,"'^BNC-973,0'"`
	Clears the annotation of the TakeNote button with variable text 973.

"^" Button Commands (Cont.)	

^BNN
Set the TakeNote network name for the specified Addresses.
	Syntax:
	`"'^BNN-<vt addr range>,<network name>'"`
	Variable:
	variable text address range = 1 - 4000.
	network name = Use a valid IP Address.
	Example:
	`SEND_COMMAND Panel,"'^BNN-973,192.168.169.99'"`
	Sets the TakeNote button network name to 192.168.169.99.

^BNT
Set the TakeNote network port for the specified Addresses.
	Syntax:
	`"'^BNT-<vt addr range>,<network port>'"`
	Variable:
	variable text address range = 1 - 4000.
	network port = 1 - 65535.
	Example:
	`SEND_COMMAND Panel,"'^BNT-973,5000'"`
	Sets the TakeNote button network port to 5000.

^BOP
Set the button opacity.
	The button opacity can be specified as a decimal between 0 - 255, where zero (0) is invisible and 255 is opaque, or as a HEX code, as used in the color commands by preceding the HEX code with the # sign. In this case, #00 becomes invisible and #FF becomes opaque. If the opacity is set to zero (0), this does not make the button inactive, only invisible.
	Syntax:
	`"'^BOP-<vt addr range>,<button states range>,<button opacity>'"`
	Variable:
	variable text address range = 1 - 4000.
	button states range = 1 - 256 for multi-state buttons (0 = All states, for General buttons 1 = Off state and 2 = On state).
	button opacity = 0 (invisible) - 255 (opaque).
	Example:
	`SEND_COMMAND Panel,"'^BOP-500.504&510.515,1,200'"`
	Example 2:
	`SEND_COMMAND Panel,"'^BOP-500.504&510.515,1,#C8'"`
	Both examples set the opacity of the buttons with the variable text range of 500-504 and 510-515 to 200.

"^" Button Commands (Cont.)	

^BOR
Set a border to a specific border style associated with a border value for those buttons with a defined address range.
	Refer to theTPD4 Border Styles by Name table on page 188 for more information.
	Syntax:
	`"'^BOR-<vt addr range>,<border style name or border value>'"`
	Variable:
	variable text address range = 1 - 4000.
	border style name = Refer to theTPD4 Border Styles by Name table on page 188.
	border value = 0 - 41.
	Examples:
	`SEND_COMMAND Panel,"'^BOR-500.504&510.515,10'"`
	Sets the border by number (#10) to those buttons with the variable text range of 500-504 & 510-515.
	`SEND_COMMAND Panel,"'^BOR-500.504&510,AMX Elite -M'"`
	Sets the border by name (AMX Elite) to those buttons with the variable text range of 500-504 & 510-515.
	The border style is available through the TPDesign4 border-style drop-down list. Refer to theTPD4 Border Styles by Name table on page 188 for more information.

^BOS
Set the video window slot ID # to the new Slot ID #.
	The new Slot ID # is set only if the specified slot is not the same as the current slot selected. Pass-thru sets the pass-thru mode to On.
	This is an optional parameter and ONLY passes data to the PC.
	Syntax:
	`"'^BOS-<vt addr range>,<button states range>,<slot number>,<pass-thru>'"`
	Variable:
	variable text address range = 1 - 4000.
	button states range = 1 - 256 for multi-state buttons (0 = All states, for General buttons 1 = Off state and 2 = On state).
	slot number = **0** = No Video Fill
	1 = Composite Video (Video Fill) (Video On)
	1200V panels only have Slot 1 available.
	2 = Component RGB
	3 = Streaming Video.
	pass-thru = Pass-thru disable = 0 or Pass-thru enable = 2.
	Example:
	`SEND_COMMAND Panel,"'^BOS-500,1,1'"`
	Sets the button to display Composite video with no pass-thru.
	Example:
	`SEND_COMMAND Panel,"'^BOS-500,1,2,1'"`
	Sets the button to display Component video with pass-thru enabled.
	Refer to the*Video Adjustment Slide-Out Option Bar* section on page 141 for more information on the slot assignments within a VG-Series panel.

"^" Button Commands (Cont.)	

^BPP
Set or clear the protected page flip flag of a button.
	Zero clears the flag.
	Syntax:
	`"'^BPP-<vt addr range>,<protected page flip flag value>'"`
	Variable:
	variable text address range = 1 - 4000.
	protected page flip flag value range = 0 - 4 (**0 clears the flag**).
	Example:
	`SEND_COMMAND Panel,"'^BPP-500,1'"`
	Sets the button to protected page flip flag 1 (sets it to password 1).

^BRD
Set the border of a button state/ states.
	Only if the specified border is not the same as the current border. The border names are available through the TPDesign4 border-name drop-down list.
	Syntax:
	`"'^BRD-<vt addr range>,<button states range>,<border name>'"`
	Variable:
	variable text address range = 1 - 4000.
	button states range = 1 - 256 for multi-state buttons (0 = All states, for General buttons 1 = Off state and 2 = On state).
	border name = Refer toTPD4 Border Styles by Name table on page 188.
	Example:
	`SEND_COMMAND Panel,"'^BRD-500.504&510.515,1&2,Quad Line'"`
	Sets the border by name (Quad Line) to those buttons with the variable text range of 500-504 & 510-515.
	Refer to theTPD4 Border Styles by Name table on page 188.

^BSF
Set the focus to the text area.
	Note: Select one button at a time (single variable text address). Do not assign a variable text address range to set focus to multiple buttons. Only one variable text address can be in focus at a time.
	Syntax:
	`"'^BSF-<vt addr range>,<selection value>'"`
	Variable:
	variable text address range = 1 - 4000.
	selection value = Unselect = 0 and select = 1.
	Example:
	`SEND_COMMAND Panel,"'^BSF-500,1'"`
	Sets the focus to the text area of the button.

^BSM
Submit text for text area buttons.
	This command causes the text areas to send their text as strings to the NetLinx Master.
	Syntax:
	`"'^BSM-<vt addr range>'"`
	Variable:
	variable text address range = 1 - 4000.
	Example:
	`SEND_COMMAND Panel,"'^BSM-500'"`
	Submits the text of the text area button.

"^" Button Commands (Cont.)	

^BSO
Set the sound played when a button is pressed.
	If the sound name is blank the sound is then cleared. If the sound name is not matched, the button sound is not changed.
	Syntax:
	`"'^BSO-<vt addr range>,<button states range>,<sound name>'"`
	Variable:
	variable text address range = 1 - 4000.
	button states range = 1 - 256 for multi-state buttons (0 = All states, for General buttons 1 = Off state and 2 = On state).
	sound name = (**blank** - sound cleared, **not matched** - button sound not changed).
	Example:
	`SEND_COMMAND Panel,"'^BSO-500,1&2,music.wav'"`
	Assigns the sound 'music.wav' to the button Off/On states.

^BVL
Log-On/Log-Off the computer control connection.
	Syntax:
	`"'^BVL-<vt addr range>,<connection>'"`
	Variable:
	variable text address range = 1 - 4000.
	connection = 0 (Log-Off connection) and 1 (Log-On connection).
	Example:
	`SEND_COMMAND Panel,"'^BVL-500,0'"`
	Logs-off the computer control connection of the button.

^BVN
Set the computer control remote host for the specified address.
	Syntax:
	`SEND_COMMAND <DEV>,"'^BVN-<vt addr range>,<remote host>'"`
	Variables:
	variable text address range = 1 - 4000.
	remote host = 1 - 50 ASCII characters.
	Example:
	`SEND_COMMAND Panel,"'^BVN-500,191.191.191.191'"`
	Sets the remote host to '191.191.191.191' for the specific computer control button.

^BVP
Set the network password for the specified address.
	Syntax:
	`"'^BVP-<vt addr range>,<network password>'"`
	Variable:
	variable text address range = 1 - 4000.
	network password = 1 - 50 ASCII characters.
	Example:
	`SEND_COMMAND Panel,"'^BVP-500,PCLOCK'"`
	Sets the password to PCLOCK for the specific PC control button.

^BVT
Set the computer control network port for the specified address.
	Syntax:
	`"'^BVT-<vt addr range>,<network port>'"`
	Variable:
	variable text address range = 1 - 4000.
	network port = 1 - 65535.
	Example:
	`SEND_COMMAND Panel,"'^BVT-500,5000'"`
	Sets the network port to 5000.

"^" Button Commands (Cont.)	

^BWW
Set the button word wrap feature to those buttons with a defined address range.
	By default, word-wrap is Off.
	Syntax:
	`"'^BWW-<vt addr range>,<button states range>,<word wrap>'"`
	Variable:
	variable text address range = 1 - 4000.
	button states range = 1 - 256 for multi-state buttons (0 = All states, for General buttons 1 = Off state and 2 = On state).
	word wrap = (0=Off and 1=On). Default is Off.
	Example:
	`SEND_COMMAND Panel,"'^BWW-500,1,1'"`
	Sets the word wrap on for the button's Off state.

^CPF
Clear all page flips from a button.
	Syntax:
	`"'^CPF-<vt addr range>'"`
	Variable:
	variable text address range = 1 - 4000.
	Example:
	`SEND_COMMAND Panel,"'^CPF-500'"`
	Clears all page flips from the button.

^DPF
Delete page flips from button if it already exists.
	Syntax:
	`"'^DFP-<vt addr range>,<actions>,<page name>'"`
	Variable:
	variable text address range = 1 - 4000.
	actions = **Stan**[dardPage] - Flip to standard page
	Prev[iousPage] - Flip to previous page
	Show[Popup] - Show Popup page
	Hide[Popup] - Hide Popup page
	Togg[lePopup] - Toggle popup state
	ClearG[roup] - Clear popup page group from all pages
	ClearP[age] - Clear all popup pages from a page with the specified page name
	ClearA[ll] - Clear all popup pages from all pages
	page name = 1 - 50 ASCII characters.
	Example:
	`SEND COMMAND Panel,"'^DPF-409,Prev'"`
	Deletes the assignment of a button from flipping to a previous page.

^ENA
Enable or disable buttons with a set variable text range.
	Syntax:
	`"'^ENA-<vt addr range>,<command value>'"`
	Variable:
	variable text address range = 1 - 4000.
	command value = (0= disable, 1= enable)
	Example:
	`SEND_COMMAND Panel,"'^ENA-500.504&510.515,0'"`
	Disables button pushes on buttons with variable text range 500-504 & 510-515.

"^" Button Commands (Cont.)	

^FON
Set a font to a specific Font ID value for those buttons with a defined address range.
	Font ID numbers are generated by the TPDesign4 programmers report.
	Syntax:
	`"'^FON-<vt addr range>,<button states range>,<font value>'"`
	Variable:
	variable text address range = 1 - 4000.
	button states range = 1 - 256 for multi-state buttons (0 = All states, for General buttons 1 = Off state and 2 = On state).
	font value = range = 1 - XXX. Refer to theDefault Font Styles and ID Numbers table on page 187.
	Example:
	`SEND_COMMAND Panel,"'^FON-500.504&510.515,1&2,4'"`
	Sets the font size to font ID #4 for the On and Off states of buttons with the variable text range of 500-504 & 510-515.

NOTE

The Font ID is generated by TPD4 and is located in TPD4 through the Main menu. ***Panel > Generate Programmer's Report >Text Only Format >Readme.txt****.*

"^" Button Commands (Cont.)	

^GDI
Change the bargraph drag increment.
	Syntax:
	`"'^GDI-<vt addr range>,<bargraph drag increment>'"`
	Variable:
	variable text address range = 1 - 4000.
	bargraph drag increment = The default drag increment is 256.
	Example:
	`SEND_COMMAND Panel,"'^GDI-7,128'"`
	Sets the bargraph with variable text 7 to a drag increment of 128.

^GIV
Invert the joystick axis and move the origin to another corner.
	Parameters 1,2, and 3 will cause a bargraph or slider to be inverted regardless of orientation. Their effect will be as described for joysticks.
	Syntax:
	`"'^GIV-<vt addr range>,<joystick axis to invert>'"`
	Variable:
	variable text address range = 1 - 4000.
	joystick axis to invert = 0 - 3.
	0 = Normal
	1 = Invert horizontal axis
	2 = Invert vertical axis
	3 = Invert both axis locations
	For a bargraph 1 = Invert , 0 = Non Invert
	Example:
	`SEND_COMMAND Panel,"'^GIV-500,3'"`
	Inverts the joystick axis origin to the bottom right corner.

"^" Button Commands (Cont.)	

^GLH
Change the bargraph upper limit.
	Syntax:
	`"'^GLH-<vt addr range>,<bargraph hi>'"`
	Variable:
	variable text address range = 1 - 4000.
	bargraph limit range = 1 - 65535 (*bargraph upper limit range*).
	Example:
	`SEND_COMMAND Panel,"'^GLH-500,1000'"`
	Changes the bargraph upper limit to 1000.

^GLL
Change the bargraph lower limit.
	Syntax:
	`"'^GLL-<vt addr range>,<bargraph low>'"`
	Variable:
	variable text address range = 1 - 4000.
	bargraph limit range = 1 - 65535 (*bargraph lower limit range*).
	Example:
	`SEND_COMMAND Panel,"'^GLL-500,150'"`
	Changes the bargraph lower limit to 150.

^GRD
Change the bargraph ramp-down time in 1/10th of a second.
	Syntax:
	`"'^GRD-<vt addr range>,<bargraph ramp down time>'"`
	Variable:
	variable text address range = 1 - 4000.
	bargraph ramp down time = In 1/10th of a second intervals.
	Example:
	`SEND_COMMAND Panel,"'^GRD-500,200'"`
	Changes the bargraph ramp down time to 20 seconds.

^GRU
Change the bargraph ramp-up time in 1/10th of a second.
	Syntax:
	`"'^GRU-<vt addr range>,<bargraph ramp up time>'"`
	Variable:
	variable text address range = 1 - 4000.
	bargraph ramp up time = In 1/10th of a second intervals.
	Example:
	`SEND_COMMAND Panel,"'^GRU-500,100'"`
	Changes the bargraph ramp up time to 10 seconds.

^GSC
Change the bargraph slider color or joystick cursor color.
	A user can also assign the color by Name and R,G,B value (RRGGBB or RRGGBBAA).
	Syntax:
	`"'^GSC-<vt addr range>,<color value>'"`
	Variable:
	variable text address range = 1 - 4000.
	color value = Refer to theRGB Values for all 88 Basic Colors table on page 185.
	Example:
	`SEND_COMMAND Panel,"'^GSC-500,12'"`
	Changes the bargraph or joystick slider color to Yellow.

<table>
<tr><th colspan="2">"^" Button Commands (Cont.)</th></tr>
<tr><td>^GSN
Change the bargraph slider name or joystick cursor name.</td><td>Slider names and cursor names can be found in the TPDesign4 slider name and cursor drop-down list.
Syntax:
<code>"'^GSN-<vt addr range>,<bargraph slider name>'"</code>
Variable:
variable text address range = 1 - 4000.
bargraph slider name = See table below.
<table>
<tr><td colspan="3">Bargraph Slider Names:</td></tr>
<tr><td>None</td><td>Ball</td><td>Circle -L</td></tr>
<tr><td>Circle -M</td><td>Circle -S</td><td>Precision</td></tr>
<tr><td>Rectangle -L</td><td>Rectangle -M</td><td>Rectangle -S</td></tr>
<tr><td>Windows</td><td>Windows Active</td><td></td></tr>
<tr><td colspan="3">Joystick Cursor Names:</td></tr>
<tr><td>None</td><td>Arrow</td><td>Ball</td></tr>
<tr><td>Circle</td><td>Crosshairs</td><td>Gunsight</td></tr>
<tr><td>Hand</td><td>Metal</td><td>Spiral</td></tr>
<tr><td>Target</td><td>View Finder</td><td></td></tr>
</table>
Example:
<code>SEND_COMMAND Panel,"'^GSN-500,Ball'"</code>
Changes the bargraph slider name or the Joystick cursor name to ’Ball’.</td></tr>
<tr><td>^ICO
Set the icon to a button.</td><td>Syntax:
<code>"'^ICO-<vt addr range>,<button states range>,<icon index>'"</code>
Variable:
variable text address range = 1 - 4000.
button states range = 1 - 256 for multi-state buttons (0 = All states, for General buttons 1 = Off state and 2 = On state).
icon index range = 0 - 9900 (a value of 0 is clear).
Example:
<code>SEND_COMMAND Panel,"'^ICO-500.504&510.515,1&2,1'"</code>
Sets the icon for On and Off states for buttons with variable text ranges of 500-504 & 510-515.</td></tr>
</table>

<table>
<tr><th colspan="2">"^" Button Commands (Cont.)</th></tr>
<tr><td>^JSB
Set bitmap/ picture alignment using a numeric keypad layout for those buttons with a defined address range.</td><td>The alignment of 0 is followed by ',<left>,<top>'. The left and top coordinates are relative to the upper left corner of the button.
Syntax:
<code>"'^JSB-<vt addr range>,<button states range>,<new text alignment>'"</code>
Variable:
variable text address range = 1 - 4000.
button states range = 1 - 256 for multi-state buttons (0 = All states, for General buttons 1 = Off state and 2 = On state).
new text alignment = Value of 1- 9 corresponds to the following locations:
0
<table><tr><td>1</td><td>2</td><td>3</td></tr><tr><td>4</td><td>5</td><td>6</td></tr><tr><td>7</td><td>8</td><td>9</td></tr></table>Zero can be used for an absolute position
Example:
<code>SEND_COMMAND Panel,"'^JSB-500.504&510.515,1&2,1'"</code>
Sets the off/on state picture alignment to upper left corner for those buttons with variable text ranges of 500-504 & 510-515.</td></tr>
<tr><td>^JSI
Set icon alignment using a numeric keypad layout for those buttons with a defined address range.</td><td>The alignment of 0 is followed by ',<left>,<top>'. The left and top coordinates are relative to the upper left corner of the button.
Syntax:
<code>"'^JSI-<vt addr range>,<button states range>,<new icon alignment>'"</code>
Variable:
variable text address range = 1 - 4000.
button states range = 1 - 256 for multi-state buttons (0 = All states, for General buttons 1 = Off state and 2 = On state).
new icon alignment = Value of 1 - 9 corresponds to the following locations:
0
<table><tr><td>1</td><td>2</td><td>3</td></tr><tr><td>4</td><td>5</td><td>6</td></tr><tr><td>7</td><td>8</td><td>9</td></tr></table>Zero can be used for an absolute position
Example:
<code>SEND_COMMAND Panel,"'^JSI-500.504&510.515,1&2,1'"</code>
Sets the Off/On state icon alignment to upper left corner for those buttons with variable text range of 500-504 & 510-515.</td></tr>
</table>

<table>
<tr><th colspan="2">"^" Button Commands (Cont.)</th></tr>
<tr><td>^JST
Set text alignment using a numeric keypad layout for those buttons with a defined address range.</td><td>The alignment of 0 is followed by ',<left>,<top>'. The left and top coordinates are relative to the upper left corner of the button.
Syntax:
<code>"'^JST-<vt addr range>,<button states range>,<new text alignment>'"</code>
Variable:
variable text address range = 1 - 4000.
button states range = 1 - 256 for multi-state buttons (0 = All states, for General buttons 1 = Off state and 2 = On state).
new text alignment = Value of 1 - 9 corresponds to the following locations:
0
<table><tr><td>1</td><td>2</td><td>3</td></tr><tr><td>4</td><td>5</td><td>6</td></tr><tr><td>7</td><td>8</td><td>9</td></tr></table>Zero can be used for an absolute position
Example:
<code>SEND_COMMAND Panel,"'^JST-500.504&510.515,1&2,1'"</code>
Sets the text alignment to the upper left corner for those buttons with variable text ranges of 500-504 & 510-515.</td></tr>
<tr><td>^MBT
Set the Mouse Button mode On for the virtual PC.</td><td>Syntax:
<code>"'^MBT-<pass data>'"</code>
Variable:
pass data:
0 = None
1 = Left
2 = Right
3 = Middle
Example:
<code>SEND COMMAND Panel,"'^MBT-1'"</code>
Sets the mouse button mode to ’Left Mouse Click’.</td></tr>
<tr><td>^MDC
Turn On the ’Mouse double-click’ feature for the virtual PC.</td><td>Syntax:
<code>"'^MDC'"</code>
Example:
<code>SEND COMMAND Panel,"'^MDC'"</code>
Sets the mouse double-click for use with the virtual PC.</td></tr>
<tr><td>^SHO
Show or hide a button with a set variable text range.</td><td>Syntax:
<code>"'^SHO-<vt addr range>,<command value>'"</code>
Variable:
variable text address range = 1 - 4000.
command value = (0= hide, 1= show).
Example:
<code>SEND_COMMAND Panel,"'^SHO-500.504&510.515,0'"</code>
Hides buttons with variable text address range 500-504 & 510-515.</td></tr>
</table>

"^" Button Commands (Cont.)	

^TEC
Set the text effect color for the specified addresses/states to the specified color.
	The Text Effect is specified by name and can be found in TPD4. You can also assign the color by name or RGB value (RRGGBB or RRGGBBAA).
	Syntax:
	`"'^TEC-<vt addr range>,<button states range>,<color value>'"`
	Variable:
	variable text address range = 1 - 4000.
	button states range = 1 - 256 for multi-state buttons (0 = All states, for General buttons 1 = Off state and 2 = On state).
	color value = Refer to theRGB Values for all 88 Basic Colors table on page 185.
	Example:
	`SEND_COMMAND Panel,"'^TEC-500.504&510.515,1&2,12'"`
	Sets the text effect color to Very Light Yellow on buttons with variable text 500-504 and 510-515.

^TEF
Set the text effect.
	The Text Effect is specified by name and can be found in TPD4.
	Syntax:
	`"'^TEF-<vt addr range>,<button states range>,<text effect name>'"`
	Variable:
	variable text address range = 1 - 4000.
	button states range = 1 - 256 for multi-state buttons (0 = All states, for General buttons 1 = Off state and 2 = On state).
	text effect name = **Refer to theText Effects table on page 211 for a listing of text effect names**.
	Example:
	`SEND_COMMAND Panel,"'^TEF-500.504&510.515,1&2,Soft Drop Shadow 3'"`
	Sets the text effect to Soft Drop Shadow 3 for the button with variable text range 500-504 and 510-515.

^TXT
Assign a text string to those buttons with a defined address range.
	Sets Non-Unicode text.
	Syntax:
	`"'^TXT-<vt addr range>,<button states range>,<new text>'"`
	Variable:
	variable text address range = 1 - 4000.
	button states range = 1 - 256 for multi-state buttons (0 = All states, for General buttons 1 = Off state and 2 = On state).
	new text = 1 - 50 ASCII characters.
	Example:
	`SEND_COMMAND Panel,"'^TXT-500.504&510.515,1&2,Test Only'"`
	Sets the On and Off state text for buttons with the variable text ranges of 500-504 & 510-515.

"^" Button Commands (Cont.)	

^UNI
Set Unicode text.
	For the ^UNI command (%UN and ^BMF command), the Unicode text is sent as ASCII-HEX nibbles.
	Syntax:
	`"'^UNI-<vt addr range>,<button states range>,<unicode text>'"`
	Variable:
	variable text address range = 1 - 4000.
	button states range = 1 - 256 for multi-state buttons (0 = All states, for General buttons 1 = Off state and 2 = On state).
	unicode text = Unicode HEX value.
	Example:
	`SEND_COMMAND Panel,"'^UNI-500,1,0041'"`
	Sets the button's unicode character to 'A'.
	Note: To send the variable text 'A' in unicode to all states of the variable text button 1, (for which the character code is 0041 Hex), send the following command:
	`SEND_COMMAND TP,"'^UNI-1,0,0041'"`
	Note: Unicode is always represented in a HEX value. TPD4 generates (through the Text Enter Box dialog) unicode HEX values. Refer to the TPDesign4 Instruction Manual for more information.

Text Effect Names

The following is a listing of text effects names. This list is associated with the **^TEF** command on page 209.

Text Effects	
• Glow -S	• Hard Drop Shadow 6
• Glow -M	• Hard Drop Shadow 7
• Glow -L	• Hard Drop Shadow 8
• Glow -X	• Soft Drop Shadow 1 with outline
• Outline -S	• Soft Drop Shadow 2 with outline
• Outline -M	• Soft Drop Shadow 3 with outline
• Outline -L	• Soft Drop Shadow 4 with outline
• Outline -X	• Soft Drop Shadow 5 with outline
• Soft Drop Shadow 1	• Soft Drop Shadow 6 with outline
• Soft Drop Shadow 2	• Soft Drop Shadow 7 with outline
• Soft Drop Shadow 3	• Soft Drop Shadow 8 with outline
• Soft Drop Shadow 4	• Medium Drop Shadow 1 with outline
• Soft Drop Shadow 5	• Medium Drop Shadow 2 with outline
• Soft Drop Shadow 6	• Medium Drop Shadow 3 with outline
• Soft Drop Shadow 7	• Medium Drop Shadow 4 with outline
• Soft Drop Shadow 8	• Medium Drop Shadow 5 with outline
• Medium Drop Shadow 1	• Medium Drop Shadow 6 with outline
• Medium Drop Shadow 2	• Medium Drop Shadow 7 with outline
• Medium Drop Shadow 3	• Medium Drop Shadow 8 with outline
• Medium Drop Shadow 4	• Hard Drop Shadow 1 with outline
• Medium Drop Shadow 5	• Hard Drop Shadow 2 with outline
• Medium Drop Shadow 6	• Hard Drop Shadow 3 with outline
• Medium Drop Shadow 7	• Hard Drop Shadow 4 with outline
• Medium Drop Shadow 8	• Hard Drop Shadow 5 with outline
• Hard Drop Shadow 1	• Hard Drop Shadow 6 with outline
• Hard Drop Shadow 2	• Hard Drop Shadow 7 with outline
• Hard Drop Shadow 3	• Hard Drop Shadow 8 with outline
• Hard Drop Shadow 4	
• Hard Drop Shadow 5	

Button Query Commands

Button Query commands reply back with a custom event. There will be one custom event for each button/state combination. Each query is assigned a unique custom event type. **The following example is for debug purposes only:**

```
NetLinx Example: CUSTOM_EVENT[device, Address, Custom event type]
```

DEFINE_EVENT

```
CUSTOM_EVENT[TP,529,1001]      // Text
CUSTOM_EVENT[TP,529,1002]      // Bitmap
CUSTOM_EVENT[TP,529,1003]      // Icon
CUSTOM_EVENT[TP,529,1004]      // Text Justification
CUSTOM_EVENT[TP,529,1005]      // Bitmap Justification
CUSTOM_EVENT[TP,529,1006]      // Icon Justification
CUSTOM_EVENT[TP,529,1007]      // Font
CUSTOM_EVENT[TP,529,1008]      // Text Effect Name
CUSTOM_EVENT[TP,529,1009]      // Text Effect Color
CUSTOM_EVENT[TP,529,1010]      // Word Wrap
CUSTOM_EVENT[TP,529,1011]      // ON state Border Color
CUSTOM_EVENT[TP,529,1012]      // ON state Fill Color
CUSTOM_EVENT[TP,529,1013]      // ON state Text Color
CUSTOM_EVENT[TP,529,1014]      // Border Name
CUSTOM_EVENT[TP,529,1015]      // Opacity
```

```
{
   Send_String 0,"'ButtonGet Id=',ITOA(CUSTOM.ID),' Type=',ITOA(CUSTOM.TYPE)"
   Send_String 0,"'Flag   =',ITOA(CUSTOM.FLAG)"
   Send_String 0,"'VALUE1 =',ITOA(CUSTOM.VALUE1)"
   Send_String 0,"'VALUE2 =',ITOA(CUSTOM.VALUE2)"
   Send_String 0,"'VALUE3 =',ITOA(CUSTOM.VALUE3)"
   Send_String 0,"'TEXT   =',CUSTOM.TEXT"
   Send_String 0,"'TEXT LENGTH =',ITOA(LENGTH_STRING(CUSTOM.TEXT))"
}
```

All custom events have the following 6 fields:

Custom Event Fields	
Field	Description
Uint Flag	0 means text is a standard string, 1 means Unicode encoded string
slong value1	button state number
slong value2	actual length of string (this is not encoded size)
slong value3	index of first character (usually 1 or same as optional index
string text	the text from the button
text length (string encode)	button text length

These fields are populated differently for each query command. The text length (String Encode) field is not used in any command.

Button Query Commands	

?BCB
Get the current border color.
	Syntax:
	`"'?BCB-<vt addr range>,<button states range>'"`
	Variable:
	variable text address range = 1 - 4000.
	button states range = 1 - 256 for multi-state buttons (0 = All states, for General buttons 1 = Off state and 2 = On state).
	custom event type **1011:**
	Flag - zero
	Value1 - Button state number
	Value2 - Actual length of string (should be 9)
	Value3 - Zero
	Text - Hex encoded color value (ex: #000000FF)
	Text length - Color name length (should be 9)
	Example:
	`SEND COMMAND Panel,"'?BCB-529,1'"`
	Gets the button 'OFF state' border color. information.
	The result sent to the Master would be:
	ButtonGet Id = 529 Type = 1011
	Flag = 0
	VALUE1 = 1
	VALUE2 = 9
	VALUE3 = 0
	TEXT = #222222FF
	TEXT LENGTH = 9

Button Query Commands (Cont.)	

?BCF
Get the current fill color.
	Syntax:
	`"'?BCF-<vt addr range>,<button states range>'"`
	Variable:
	variable text address range = 1 - 4000.
	button states range = 1 - 256 for multi-state buttons (0 = All states, for General buttons 1 = Off state and 2 = On state).
	custom event type **1012:**
	Flag - Zero
	Value1 - Button state number
	Value2 - Actual length of string (should be 9)
	Value3 - Zero
	Text - Hex encoded color value (ex: #000000FF)
	Text length - Color name length (should be 9)
	Example:
	`SEND COMMAND Panel,"'?BCF-529,1'"`
	Gets the button 'OFF state' fill color information.
	The result sent to the Master would be:
	ButtonGet Id = 529 Type = 1012
	Flag = 0
	VALUE1 = 1
	VALUE2 = 9
	VALUE3 = 0
	TEXT = #FF8000FF
	TEXT LENGTH = 9

?BCT
Get the current text color.
	Syntax:
	`"'?BCT-<vt addr range>,<button states range>'"`
	Variable:
	variable text address range = 1 - 4000.
	button states range = 1 - 256 for multi-state buttons (0 = All states, for General buttons 1 = Off state and 2 = On state).
	custom event type **1013:**
	Flag - Zero
	Value1 - Button state number
	Value2 - Actual length of string (should be 9)
	Value3 - Zero
	Text - Hex encoded color value (ex: #000000FF)
	Text length - Color name length (should be 9)
	Example:
	`SEND COMMAND Panel,"'?BCT-529,1'"`
	Gets the button 'OFF state' text color information.
	The result sent to Master would be:
	ButtonGet Id = 529 Type = 1013
	Flag = 0
	VALUE1 = 1
	VALUE2 = 9
	VALUE3 = 0
	TEXT = #FFFFFEFF
	TEXT LENGTH = 9

Button Query Commands (Cont.)	

?BMP
Get the current bitmap name.
	Syntax:
	`"'?BMP-<vt addr range>,<button states range>'"`
	Variable:
	variable text address range = 1 - 4000.
	button states range = 1 - 256 for multi-state buttons (0 = All states, for General buttons 1 = Off state and 2 = On state).
	custom event type **1002:**
	Flag - Zero
	Value1 - Button state number
	Value2 - Actual length of string
	Value3 - Zero
	Text - String that represents the bitmap name
	Text length - Bitmap name text length (should be 9)
	Example:
	`SEND COMMAND Panel,"'?BMP-529,1'"`
	Gets the button 'OFF state' bitmap information.
	The result sent to the Master would be:
	ButtonGet Id = 529 Type = 1002
	Flag = 0
	VALUE1 = 1
	VALUE2 = 9
	VALUE3 = 0
	TEXT = Buggs.png
	TEXT LENGTH = 9

?BOP
Get the overall button opacity.
	Syntax:
	`"'?BOP-<vt addr range>,<button states range>'"`
	Variable:
	variable text address range = 1 - 4000.
	button states range = 1 - 256 for multi-state buttons (0 = All states, for General buttons 1 = Off state and 2 = On state).
	custom event type **1015:**
	Flag - Zero
	Value1 - Button state number
	Value2 - Opacity
	Value3 - Zero
	Text - Blank
	Text length - Zero
	Example:
	`SEND COMMAND Panel,"'?BOP-529,1'"`
	Gets the button 'OFF state' opacity information.
	The result sent to the Master would be:
	ButtonGet Id = 529 Type = 1015
	Flag = 0
	VALUE1 = 1
	VALUE2 = 200
	VALUE3 = 0
	TEXT =
	TEXT LENGTH = 0

Button Query Commands (Cont.)	

?BRD
Get the current border name.
	Syntax:
	`"'?BRD-<vt addr range>,<button states range>'"`
	Variable:
	variable text address range = 1 - 4000.
	button states range = 1 - 256 for multi-state buttons (0 = All states, for General buttons 1 = Off state and 2 = On state).
	custom event type **1014:**
	Flag - Zero
	Value1 - Button state number
	Value2 - Actual length of string
	Value3 - Zero
	Text - String that represents border name
	Text length - Border name length
	Example:
	`SEND COMMAND Panel,"'?BRD-529,1'"`
	Gets the button 'OFF state' border information.
	The result sent to the Master would be:
	ButtonGet Id = 529 Type = 1014
	Flag = 0
	VALUE1 = 1
	VALUE2 = 22
	VALUE3 = 0
	TEXT = Double Bevel Raised -L
	TEXT LENGTH = 22

?BWW
Get the current word wrap flag status.
	Syntax:
	`"'?BWW-<vt addr range>,<button states range>'"`
	Variable:
	variable text address range = 1 - 4000.
	button states range = 1 - 256 for multi-state buttons (0 = All states, for General buttons 1 = Off state and 2 = On state).
	custom event type **1010:**
	Flag - Zero
	Value1 - Button state number
	Value2 - 0 = no word wrap, 1 = word wrap
	Value3 - Zero
	Text - Blank
	Text length - Zero
	Example:
	`SEND COMMAND Panel,"'?BWW-529,1'"`
	Gets the button 'OFF state' word wrap flag status information.
	The result sent to the Master would be:
	ButtonGet Id = 529 Type = 1010
	Flag = 0
	VALUE1 = 1
	VALUE2 = 1
	VALUE3 = 0
	TEXT =
	TEXT LENGTH = 0

Button Query Commands (Cont.)	

?FON
Get the current font index.
	Syntax:
	`"'?FON-<vt addr range>,<button states range>'"`
	Variable:
	variable text address range = 1 - 4000.
	button states range = 1 - 256 for multi-state buttons (0 = All states, for General buttons 1 = Off state and 2 = On state).
	custom event type **1007:**
	Flag - Zero
	Value1 - Button state number
	Value2 - Font index
	Value3 - Zero
	Text - Blank
	Text length - Zero
	Example:
	`SEND COMMAND Panel,"'?FON-529,1'"`
	Gets the button 'OFF state' font type index information.
	The result sent to the Master would be:
	ButtonGet Id = 529 Type = 1007
	Flag = 0
	VALUE1 = 1
	VALUE2 = 72
	VALUE3 = 0
	TEXT =
	TEXT LENGTH = 0

?ICO
Get the current icon index.
	Syntax:
	`"'?ICO-<vt addr range>,<button states range>'"`
	Variable:
	variable text address range = 1 - 4000.
	button states range = 1 - 256 for multi-state buttons (0 = All states, for General buttons 1 = Off state and 2 = On state).
	custom event type **1003:**
	Flag - Zero
	Value1 - Button state number
	Value2 - Icon Index
	Value3 - Zero
	Text - Blank
	Text length - Zero
	Example:
	`SEND COMMAND Panel,"'?ICO-529,1&2'"`
	Gets the button 'OFF state' icon index information.
	The result sent to the Master would be:
	ButtonGet Id = 529 Type = 1003
	Flag = 0
	VALUE1 = 2
	VALUE2 = 12
	VALUE3 = 0
	TEXT =
	TEXT LENGTH = 0

Button Query Commands (Cont.)	

?JSB
Get the current bitmap justification.
	Syntax:
	`"'?JSB-<vt addr range>,<button states range>'"`
	Variable:
	variable text address range = 1 - 4000.
	button states range = 1 - 256 for multi-state buttons (0 = All states, for General buttons 1 = Off state and 2 = On state).
	custom event type **1005:**
	Flag - Zero
	Value1 - Button state number
	Value2 - 1 - 9 justify
	Value3 - Zero
	Text - Blank
	Text length - Zero
	Example:
	`SEND COMMAND Panel,"'?JSB-529,1'"`
	Gets the button 'OFF state' bitmap justification information.
	The result sent to the Master would be:
	ButtonGet Id = 529 Type = 1005
	Flag = 0
	VALUE1 = 1
	VALUE2 = 5
	VALUE3 = 0
	TEXT =
	TEXT LENGTH = 0

?JSI
Get the current icon justification.
	Syntax:
	`"'?JSI-<vt addr range>,<button states range>'"`
	Variable:
	variable text address range = 1 - 4000.
	button states range = 1 - 256 for multi-state buttons (0 = All states, for General buttons 1 = Off state and 2 = On state).
	custom event type **1006:**
	Flag - Zero
	Value1 - Button state number
	Value2 - 1 - 9 justify
	Value3 - Zero
	Text - Blank
	Text length - Zero
	Example:
	`SEND COMMAND Panel,"'?JSI-529,1'"`
	Gets the button 'OFF state' icon justification information.
	The result sent to the Master would be:
	ButtonGet Id = 529 Type = 1006
	Flag = 0
	VALUE1 = 1
	VALUE2 = 6
	VALUE3 = 0
	TEXT =
	TEXT LENGTH = 0

Button Query Commands (Cont.)	

?JST
Get the current text justification.
	Syntax:
	`"'?JST-<vt addr range>,<button states range>'"`
	Variable:
	variable text address range = 1 - 4000.
	button states range = 1 - 256 for multi-state buttons (0 = All states, for General buttons 1 = Off state and 2 = On state).
	custom event type **1004:**
	Flag - Zero
	Value1 - Button state number
	Value2 - 1 - 9 justify
	Value3 - Zero
	Text - Blank
	Text length - Zero
	Example:
	`SEND COMMAND Panel,"'?JST-529,1'"`
	Gets the button 'OFF state' text justification information.
	The result sent to the Master would be:
	ButtonGet Id = 529 Type = 1004
	Flag = 0
	VALUE1 = 1
	VALUE2 = 1
	VALUE3 = 0
	TEXT =
	TEXT LENGTH = 0

?TEC
Get the current text effect color.
	Syntax:
	`"'?TEC-<vt addr range>,<button states range>'"`
	Variable:
	variable text address range = 1 - 4000.
	button states range = 1 - 256 for multi-state buttons (0 = All states, for General buttons 1 = Off state and 2 = On state).
	custom event type **1009:**
	Flag - Zero
	Value1 - Button state number
	Value2 - Actual length of string (should be 9)
	Value3 - Zero
	Text - Hex encoded color value (ex: #000000FF)
	Text length - Color name length (should be 9)
	Example:
	`SEND COMMAND Panel,"'?TEC-529,1'"`
	Gets the button 'OFF state' text effect color information.
	The result sent to the Master would be:
	ButtonGet Id = 529 Type = 1009
	Flag = 0
	VALUE1 = 1
	VALUE2 = 9
	VALUE3 = 0
	TEXT = #5088F2AE
	TEXT LENGTH = 9

Button Query Commands (Cont.)	

?TEF
Get the current text effect name.
	Syntax:
	`"'?TEF-<vt addr range>,<button states range>'"`
	Variable:
	variable text address range = 1 - 4000.
	button states range = 1 - 256 for multi-state buttons (0 = All states, for General buttons 1 = Off state and 2 = On state).
	custom event type **1008:**
	Flag - Zero
	Value1 - Button state number
	Value2 - Actual length of string
	Value3 - Zero
	Text - String that represents the text effect name
	Text length - Text effect name length
	Example:
	`SEND COMMAND Panel,"'?TEF-529,1'"`
	Gets the button 'OFF state' text effect name information.
	The result sent to the Master would be:
	ButtonGet Id = 529 Type = 1008
	Flag = 0
	VALUE1 = 1
	VALUE2 = 18
	VALUE3 = 0
	TEXT = Hard Drop Shadow 3
	TEXT LENGTH = 18

?TXT
Get the current text information.
	Syntax:
	`"'?TXT-<vt addr range>,<button states range>,<optional index>'"`
	Variable:
	variable text address range = 1 - 4000.
	button states range = 1 - 256 for multi-state buttons (0 = All states, for General buttons 1 = Off state and 2 = On state).
	optional index = This is used if a string was too long to get back in one command. The reply will start at this index.
	custom event type **1001:**
	Flag - Zero
	Value1 - Button state number
	Value2 - Actual length of string
	Value3 - Index
	Text - Text from the button
	Text length - Button text length
	Example:
	`SEND COMMAND Panel,"'?TXT-529,1'"`
	Gets the button 'OFF state' text information.
	The result sent to the Master would be:
	ButtonGet Id = 529 Type = 1001
	Flag = 0
	VALUE1 = 1
	VALUE2 = 14
	VALUE3 = 1
	TEXT = This is a test
	TEXT LENGTH = 14

Panel Runtime Operations

Serial Commands are used in the AxcessX Terminal Emulator mode. These commands are case insensitive.

Panel Runtime Operation Commands	

ABEEP
Output a single beep even if beep is Off.
	Syntax:
	`"'ABEEP'"`
	Example:
	`SEND COMMAND Panel,"'ABEEP'"`
	Outputs a beep of duration 1 beep even if beep is Off.

ADBEEP
Output a double beep even if beep is Off.
	Syntax:
	`"'ADBEEP'"`
	Example:
	`SEND COMMAND Panel,"'ADBEEP'"`
	Outputs a double beep even if beep is Off.

@AKB
Pop up the keyboard icon and initialize the text string to that specified.
	Keyboard string is set to null on power up and is stored until power is lost. The Prompt Text is optional.
	Syntax:
	`"'@AKB-<initial text>;<prompt text>'"`
	Variables:
	`initial text = 1 - 50 ASCII characters.`
	`prompt text = 1 - 50 ASCII characters.`
	Example:
	`SEND COMMAND Panel,"'@AKB-Texas;Enter State'"`
	Pops up the Keyboard and initializes the text string 'Texas' with prompt text 'Enter State'.

AKEYB
Pop up the keyboard icon and initialize the text string to that specified.
	Keyboard string is set to null on power up and is stored until power is lost.
	Syntax:
	`"'AKEYB-<initial text>'"`
	Variables:
	`initial text = 1 - 50 ASCII characters.`
	Example:
	`SEND COMMAND Panel,"'AKEYB-This is a Test'"`
	Pops up the Keyboard and initializes the text string 'This is a Test'.

AKEYP
Pop up the keypad icon and initialize the text string to that specified.
	The keypad string is set to null on power up and is stored until power is lost.
	Syntax:
	`"'AKEYP-<number string>'"`
	Variables:
	`number string = 0 - 9999.`
	Example:
	`SEND COMMAND Panel,"'AKEP-12345'"`
	Pops up the Keypad and initializes the text string '12345'.

AKEYR
Remove the Keyboard/ Keypad.
	Remove keyboard or keypad that was displayed using 'AKEYB', 'AKEYP', 'PKEYP', @AKB, @AKP, @PKP, @EKP, or @TKP commands.
	Syntax:
	`"'AKEYR'"`
	Example:
	`SEND COMMAND Panel,"'AKEYR'"`
	Removes the Keyboard/Keypad.

Panel Runtime Operation Commands (Cont.)	

@AKP
Pop up the keypad icon and initialize the text string to that specified.
	Keypad string is set to null on power up and is stored until power is lost. The Prompt Text is optional.
	Syntax:
	`"'@AKP-<initial text>;<prompt text>'"`
	Variables:
	`initial text = 1 - 50 ASCII characters.`
	`prompt text = 1 - 50 ASCII characters.`
	Example:
	`SEND COMMAND Panel,"'@AKP-12345678;ENTER PASSWORD'"`
	Pops up the Keypad and initializes the text string '12345678' with prompt text 'ENTER PASSWORD'.

@AKR
Remove the Keyboard/ Keypad.
	Remove keyboard or keypad that was displayed using 'AKEYB', 'AKEYP', 'PKEYP', @AKB, @AKP, @PKP, @EKP, or @TKP commands.
	Syntax:
	`"'@AKR'"`
	Example:
	`SEND COMMAND Panel,"'@AKR'"`
	Removes the Keyboard/Keypad.

BEEP
Output a beep.
	Syntax:
	`"'BEEP'"`
	Example:
	`SEND COMMAND Panel,"'BEEP'"`
	Outputs a beep.

BRIT
Set the panel brightness.
	Syntax:
	`"'BRIT-<brightness level>'"`
	Variable:
	brightness level = 0 - 100.
	Example:
	`SEND COMMAND Panel,"'BRIT-50'"`
	Sets the brightness level to 50.

@BRT
Set the panel brightness.
	Syntax:
	`"'@BRT-<brightness level>'"`
	Variable:
	brightness level = 0 - 100.
	Example:
	`SEND COMMAND Panel,"'@BRT-70'"`
	Sets the brightness level to 70.

DBEEP
Output a double beep.
	Syntax:
	`"'DBEEP'"`
	Example:
	`SEND COMMAND Panel,"'DBEEP'"`
	Outputs a double beep.

Panel Runtime Operation Commands (Cont.)	

@EKP
Extend the Keypad.
	Pops up the keypad icon and initializes the text string to that specified. The Prompt Text is optional.
	Syntax:
	`"'@EKP-<initial text>;<prompt text>'"`
	Variables:
	`initial text = 1 - 50 ASCII characters.`
	`prompt text = 1 - 50 ASCII characters.`
	Example:
	`SEND COMMAND Panel,"'@EKP-33333333;Enter Password'"`
	Pops up the Keypad and initializes the text string '33333333' with prompt text 'Enter Password'.

PKEYP
Present a private keypad.
	Pops up the keypad icon and initializes the text string to that specified. Keypad displays a '*' instead of the numbers typed. The Prompt Text is optional.
	Syntax:
	`"'PKEYP-<initial text>'"`
	Variables:
	`initial text = 1 - 50 ASCII characters.`
	Example:
	`SEND COMMAND Panel,"'PKEYP-123456789'"`
	Pops up the Keypad and initializes the text string '123456789' in '*'.

@PKP
Present a private keypad.
	Pops up the keypad icon and initializes the text string to that specified. Keypad displays a '*' instead of the numbers typed. The Prompt Text is optional.
	Syntax:
	`"'@PKP-<initial text>;<prompt text>'"`
	Variables:
	`initial text = 1 - 50 ASCII characters.`
	`prompt text = 1 - 50 ASCII characters.`
	Example:
	`SEND COMMAND Panel,"'@PKP-1234567;ENTER PASSWORD'"`
	Pops up the Keypad and initializes the text string 'ENTER PASSWORD' in '*'.

SETUP
Send panel to SETUP page.
	Syntax:
	`"'SETUP'"`
	Example:
	`SEND COMMAND Panel,"'SETUP'"`
	Sends the panel to the Setup Page.

SHUTDOWN
Shut down the batteries providing power to the panel.
	Syntax:
	`"'SHUTDOWN'"`
	Example:
	`SEND COMMAND Panel,"'SHUTDOWN'"`
	Shuts-down the batteries feeding power to the panel. This function saves the battery from discharging.

SLEEP
Force the panel into screen saver mode.
	Syntax:
	`"'SLEEP'"`
	Example:
	`SEND COMMAND Panel,"'SLEEP'"`
	Forces the panel into screen saver mode.

Panel Runtime Operation Commands (Cont.)	

@SOU
Play a sound file.
	Syntax:
	`"'@SOU-<sound name>'"`
	Variables:
	`sound name = Name of the sound file. Supported sound file formats are: WAV & MP3.`
	Example:
	`SEND COMMAND Panel,"'@SOU-Music.wav'"`
	Plays the 'Music.wav' file.

@TKP
Present a telephone keypad.
	Pops up the keypad icon and initializes the text string to that specified. The Prompt Text is optional.
	Syntax:
	`"'@TKP-<initial text>;<prompt text>'"`
	Variables:
	`initial text = 1 - 50 ASCII characters.`
	`prompt text = 1 - 50 ASCII characters.`
	Example:
	`SEND COMMAND Panel,"'@TKP-999.222.1211;Enter Phone Number'"`
	Pops-up the Keypad and initializes the text string '999.222.1211' with prompt text 'Enter Phone Number'.

TPAGEON
Turn On page tracking.
	This command turns On page tracking, whereby when the page or popups change, a string is sent to the Master. This string may be captured with a CREATE_BUFFER command for one panel and sent directly to another panel.
	Syntax:
	`"'TPAGEON'"`
	Example:
	`SEND COMMAND Panel,"'TPAGEON'"`
	Turns On page tracking.

TPAGEOFF
Turn Off page tracking.
	Syntax:
	`"'TPAGEOFF'"`
	Example:
	`SEND COMMAND Panel,"'TPAGEOFF'"`
	Turns Off page tracking.

@VKB
Popup the virtual keyboard.
	Syntax:
	`"'@VKB'"`
	Example:
	`SEND COMMAND Panel,"'@VKB'"`
	Pops-up the virtual keyboard.

WAKE
Force the panel out of screen saver mode.
	Syntax:
	`"'WAKE'"`
	Example:
	`SEND COMMAND Panel,"'WAKE'"`
	Forces the panel out of the screen saver mode.

Input Commands

These Send Commands are case insensitive.

Input Commands	

^CAL
Put panel in calibration mode.
	Syntax:
	`"'^CAL'"`
	Example:
	`SEND COMMAND Panel,"'^CAL'"`
	Puts the panel in calibration mode.

^KPS
Set keyboard pass-thru via the RGB card.
	Syntax:
	`"'^KPS-<passs data>'"`
	Variables:
	pass data:
	<blank/empty> = Disables the keyboard.
	0 = Pass-thru disabled.
	1 = Not used.
	2 = Pass-thru enabled.
	3 & 4 = Not used.
	5 = Sends out data to the Master.
	Example:
	`SEND COMMAND Panel,"'^KPS-5'"`
	Sets the keyboard pass-thru to the Master. Option 5 sends keystrokes directly to the Master via the Send Output String mechanism. This process sends a virtual keystroke command (^VKS) to the Master.
	Example 2:
	`SEND COMMAND Panel,"'^KPS-0'"`
	Disables the keyboard pass-thru to the Master.
	The following point defines how the parameters within this command work:
	• Accepts keystrokes from any of these sources: attached USB keyboard or Virtual keyboard.

^MPS
Set the mouse pass-thru.
	Syntax:
	`"'^MPS-<pass data>'"`
	Variables:
	pass data:
	<blank/empty> = Disables the mouse.
	0 = Pass-thru disable.
	1 = Not used.
	2 = pass-thru enable.
	3 - 5 = Not used.
	Example:
	`SEND COMMAND Panel,"'^MPS-2'"`
	Sets the mouse pass-thru via the NXA-RGB card.
	Note: When this command is given, it causes all mice connected to the G4 product and any mice on a computer connected via a card with USB output to reset to position 0,0.

Input Commands (Cont.)	

^SLT
Send a command to a given slot.
	These commands are directed at the video card subsystems. Slot commands contain a series of name/value pairs separated by commas. These commands are case insensitive.
	Syntax:
	`"'^SLT-<slot number>,<slot command>'"`
	Variables:
	slot number = 1 - 3 (each of these options corresponds to an on-board slot position where the related components reside.)
	Slot 1= Composite Video (common to both 1200-V and VG-Series)
	Slot 2 = RGB Component Video (only available on the VG-Series)
	Slot 3 = Streaming MPEG Video (only available on the VG-Series)
	slot command = *see list below*:
	Interlace = <0 or 1> where:
	0 = Deselects Interlace and **1** = Selects Interlace
	Sharpness = < 0 or 1> where:
	0 = Disables Sharpness and **1** = Enables Sharpness
	SyncOn Green = < 0 or 1> where
	0 = Disables SyncOnGreen and **1**= Enables SyncOnGreen
	Example:
	`SEND_COMMAND TP,"'^SLT-1,Interlace=1'"`
	Enables Interlace on the incoming Composite video signal.
	`SEND_COMMAND TP,"'^SLT-3,Sharpness=1'"`
	Enables sharpness on the incoming MPEG video stream (if available).
	`SEND_COMMAND TP,"'^SLT-2,SyncOnGreen=1'"`
	Enables the SynOnGreen feature for the incoming RGB signal (if available).

^VKS
Send one or more virtual keystrokes to the G4 application.
	Key presses and key releases are not distinguished except in the case of CTRL, ALT, and SHIFT.
	Refer to theEmbedded Codes table on page 227 that define special characters which can be included with the string but may not be represented by the ASCII character set.
	Syntax:
	`"'^VKS-<string>'"`
	Variable:
	string = Only 1 string per command/only one stroke per command.
	Example:
	`SEND COMMAND Panel,"'^VKS-'8"`
	Sends out the keystroke 'backspace' to the G4 application.

Embedded Codes

The following is a list of G4 compatible embedded codes:

Embedded Codes		
Decimal numbers	Hexidecimal values	Virtual keystroke
8	($08)	Backspace
13	($0D)	Enter
27	($1B)	ESC
128	($80)	CTRL key down
129	($81)	ALT key down
130	($82)	Shift key down
131	($83)	F1
132	($84)	F2
133	($85)	F3
134	($86)	F4
135	($87)	F5
136	($88)	F6
137	($89)	F7
138	($8A)	F8
139	($8B)	F9
140	($8C)	F10
141	($8D)	F11
142	($8E)	F12
143	($8F)	Num Lock
144	($90)	Caps Lock
145	($91)	Insert
146	($92)	Delete
147	($93)	Home
148	($94)	End
149	($95)	Page Up
150	($96)	Page Down
151	($97)	Scroll Lock
152	($98)	Pause
153	($99)	Break
154	($9A)	Print Screen
155	($9B)	SYSRQ
156	($9C)	Tab
157	($9D)	Windows
158	($9E)	Menu
159	($9F)	Up Arrow
160	($A0)	Down Arrow
161	($A1)	Left Arrow
162	($A2)	Right Arrow
192	($C0)	CTRL key up
193	($C1)	ALT key up
194	($C2)	Shift key up

Panel Setup Commands

These commands are case insensitive.

Panel Setup Commands	

^MUT
Set the panel mute state.
	Syntax:
	`"'^MUT-<mute state>'"`
	Variable:
	mute state= 0 = Mute Off and 1 = Mute On.
	Example:
	`SEND_COMMAND Panel,"'^MUT-1'"`
	Sets the panel's master volume to mute.

@PWD
Set the page flip password.
	@PWD sets the level 1 password only.
	Syntax:
	`"'@PWD-<page flip password>'"`
	Variables:
	`page flip password = 1 - 50 ASCII characters.`
	Example:
	`SEND COMMAND Panel,"'@PWD-Main'"`
	Sets the page flip password to 'Main'.

^PWD
Set the page flip password.
	Password level is required and must be 1 - 4.
	Syntax:
	`"'^PWD-<password level>,<page flip password>'"`
	Variables:
	`password level = 1 - 4.`
	page flip password = 1 - 50 ASCII characters.
	Example:
	`SEND COMMAND Panel,"'^PWD-1,Main'"`
	Sets the page flip password on Password Level 1 to 'Main'.

@RPP
Reset the protected password.
	@RPP resets the protected password to its default (1988).
	Syntax:
	`"'@RPP'"`
	Example:
	`SEND COMMAND Panel,"'@RPP'"`
	Resets the protected Setup page password to '1988'.

^VOL
Set the panel volume.
	Syntax:
	`"'^VOL-<volume level>'"`
	Variable:
	volume level = 0 - 100. ***100 is maximum volume setting.***
	Example:
	`SEND_COMMAND Panel,"'^VOL-50'"`
	Set the panel volume to 50.

Dynamic Image Commands

The following is a listing and descriptions of Dynamic Image Commands.

Dynamic Image Commands	

^BBR
Set the bitmap of a button to use a particular resource.
	Syntax:
	`"'^BBR-<vt addr range>,<button states range>,<resource name>'"`
	Variable:
	variable text address range = 1 - 4000.
	button states range = 1 - 256 for multi-state buttons (0 = All states, for General buttons 1 = Off state and 2 = On state).
	resource name = 1 - 50 ASCII characters.
	Example:
	`SEND_COMMAND Panel,"'^BBR-700,1,Sports_Image'"`
	Sets the resource name of the button to 'Sports_Image'.

^RAF	See page 230.

^RFR
Force a refresh for a given resource.
	Syntax:
	`"'^RFR-<resource name>'"`
	Variable:
	resource name = 1 - 50 ASCII characters.
	Example:
	`SEND_COMMAND Panel,"'^RFR-Sports_Image'"`
	Forces a refresh on 'Sports_Image'.

^RMF
Modify an existing resource.
	Syntax:
	`"'^RMF-<resource name>,<data>'"`
	Variable:
	resource name = 1 - 50 ASCII characters
	data = Refer to the table in the RAF command for more information.
	Example:
	`SEND_COMMAND Panel,"'^RMF-Sports_Image,%ALab_Test/Images%Ftest.jpg'"`
	Changes the resource 'Sports_Image' file name to 'test.jpg' and the path to 'Lab_Test/Images'.

^RSR
Change the refresh rate for a given resource.
	Syntax:
	`"'^RSR-<resource name>,<refresh rate>'"`
	Variable:
	resource name = 1 - 50 ASCII characters.
	refresh rate = Measured in seconds.
	Example:
	`SEND_COMMAND Panel,"'^RSR-Sports_Image,5'"`
	Sets the refresh rate to 5 seconds for the given resource ('Sports_Image').

Dynamic Image Commands (Cont.)

^RAF

Add new resources.

Adds any and all resource parameters by sending embedded codes and data.

Syntax:

```
"'^RAF-<resource name>,<data>'"
```

Variable:

resource name = 1 - 50 ASCII characters.

data = Refers to the embedded codes, see table below.

Embedded Codes:

Parameter	Embedded Code	Description
protocol	'%P<0-1>'	Set protocol. HTTP (0) or FTP (1)
user	'%U<user>'	Set Username for authentication.
password	'%S<password>'	Set Password for authentication.
host	'%H<host>'	Set Host Name (fully qualified DNS or IP Address).
file	'%F<file>'	Full path to the location of the file or program that will return the resource. The path must be a valid HTTP URL minus the protocol and host. The only exception to this is the inclusion of special escape sequences and in the case of the FTP protocol, regular expressions.
path	'%A<path>'	Set Directory path. The path must be a valid HTTP URL minus the protocol, host, and filename. The only exception to this is the inclusion of special escape sequences and in the case of the FTP protocol, regular expressions.
refresh	'%R<refresh 1-65535>'	The number of seconds between refreshes in which the resource is downloaded again. Refreshing a resource causes the button displaying that resource to refresh also. The default value is 0 (only download the resource once).
newest	'%N<0-1>'	Set the newest file. A value of 1 means that only the most recent file matching the pattern is downloaded.
preserve	'%V<0-1>'	Set the value of the preserve flag. Default is 0. Currently preserve has no function.

Example:

```
SEND_COMMAND Panel,"'^RAF-New Image,%P0%HAMX.COM%ALab/
Test_file%Ftest.jpg'"
```

Adds a new resource. The resource name is 'New Image', %P (protocol) is an HTTP, %H (host name) is ***AMX.COM***, %A (file path) is Lab/Test file, and %F (file name) is ***test.jpg***.

Troubleshooting

This section describes the solutions to possible hardware/firmware issues that could arise during the common operation of a Modero touch panel.

Troubleshooting Information	
Symptom	Solution
Manifest.xma can not be found. An error occurs when sending a file to a G4 panel.	• Manifest.xma is the file that contains the listing for all the files. If you see this error again, before attempting to send the file, uncheck the Smart Transfer box. It may be necessary do a Full Clean.
When using G4 WebControl to communicate with a target panel, a VNC Server dialog appears on my screen.	• During a WebControl connection to a target panel you are prompted with a G4 Authentication dialog which asks you to enter the assigned password for the panel (before gaining access). • If you are ever prompted with a VNC Server dialog, you must enter the IP Address of the target panel. This can be found within the **Setup** > **Protected Setup** > System Settings page. - This IP Address of the panel appears within the IP Settings section of this page • Enter the IP Address and click **OK**. You will then be prompted with the G4 Authentication popup where you must enter the panel's WebControl password.
While attempting to communicate directly with the Virtual Master (on the PC) via a USB connection, I can't get my communication icon to turn Green.	• A Green communication icon indicates that a connection has been established to the target Master or target Virtual Master. • Launch NetLinx Studio and configure the Master Connection communication settings for a Virtual Master. • Navigate to the System Settings page and toggle the *Type* field to **USB**. • Make sure the Type-A USB connector is securely connected to the PC. • Make sure the panel DOESN'T have the mini-USB connected and TURN OFF the panel. • Once the panel has turned ON THEN connect the mini-USB to the Program Port. The USB icon should appear in your system tray. If it doesn't, refer to the *Configuring and Using USB with a Virtual Master* section on page 95. • The panel can take a few minutes to detect the connection to the PC.
I keep getting a yellow exclamation point on my USB in the System Tray.	• Make sure you have installed the latest USB driver for the AMX LAN. • Even if you have loaded the latest NetLinx Studio, it is recommended that if you are working with the new 1200V and/or VG-Series of panels, that you install the updated USB executable available at www.amx.com. Refer to the *Configuring and Using USB with a Virtual Master* section on page 95.
Calibration is not working.	• After the Modero touch panel has been updated with a new firmware kit (downloaded to the panel through NetLinx Studio), the calibration could need to be reset. • Cycling power to the panel should provide a baseline calibration for the particular touch panel. Proceed to the Calibration page and reset the on-screen calibration.
Panel doesn't respond to my touches	• The protective cover acts to press on the entire LCD and makes calibration difficult because the user can't calibrate on specific crosshairs when the sheet is pressing on the whole LCD. • Verify that the protective laminate coating on the LCD is removed before beginning any calibration process.

Troubleshooting Information (Cont.)	
Symptom	Solution
I updated my panel firmware but my Battery Base page doesn't seem to be working properly.	• Cycle power manually to the panel and check the Battery Base page after startup. • If downloading the firmware to the panel via a COM port, try using an IP Address and retry the download of the firmware to the panel.
There is a crawling, dashed line on the left border of the graphics.	• On some units at some resolutions, there are wavy lines across the entire screen. This has been seen on middle resolutions and is referred to as the "Mid Range Fallout" problem. • This is due to the graphics controller settings in the firmware. • Update firmware to the latest v2.XX. firmware. • Visit the **www.amx.com** > **Tech Center** > **Downloadable Files** > **Firmware Files** > **Modero panels**. Then Download the KIT file to your computer.
My Modero panel isn't appearing in my Workspace window.	• Verify that the System number is the same on both the NetLinx Workspace window and the System Settings page on the Modero panel. • Verify you have entered the proper NetLinx Master IP and connection methods into the Master Connection section of the System Settings page. • Refer to the *System Settings Page* section on page 166 for more information.
My Modero panel can't obtain a DHCP Address	In requesting a DHCP Address, the DHCP Server can take up to a few minutes to provide the address. • Verify there is an active Ethernet connection attached to the rear of the Modero before beginning these procedures. • Select **Diagnostics** > **Network Address**, from the Main menu and verify the System number. • If the IP Address field is still empty, give the Modero a few minutes to negotiate a DHCP Address and try again.
My NXT-BP battery pack is blinking when I check the battery life indicator.	• A blinking battery life LED indicates that there is less than 10% power charge remaining on the battery. • It is recommended that you fully charge the battery either in the NXA-BASE/B battery base or in the NXT-CHG battery charger. • Refer to the *NXA-BASE/B Battery Base Kit (FG2255K)* section on page 45 for more information.
I was using the power from PSN, and when I connected my NXA-BASE/B battery base to the active panel, my screen went blank.	• Modero battery bases can not be "hot-swapped" or replaced without powering down the Modero and removing the PSN connector. If you are currently using a direct power connection to the panel and then wish to connect an NXA-BASE/B. First, power-down the panel and detach the rear power connection. Then, remove any batteries from within the NXA-BASE/B and connect the battery base to the underside of the panel. After connecting the base to the un-powered panel, then run power to the panel by either reconnecting the power cable to the rear of the panel or inserting the NXT-BP batteries into the NXA-BASE/B. • Refer to the *NXA-BASE/B Battery Base Kit (FG2255K)* section on page 45 and *Installing the NXA-BASE/B to an NXT Modero Panel* section on page 46 for more information.
My WEP doesn't seem to be working.	• WEP will not work unless the same default key is set on both the panel and the AP. • For example: if you had your access point set to default key 4 which was 01:02:03:04:05 and you set the Modero to key 1 which was also 01:02:03:04:05 it will not work. You have to set key 4 on the Modero to 01:02:03:04:0.

Troubleshooting Information (Cont.)	
Symptom	Solution
I can't seem to completely charge my batteries from within an NXA-BASE/B connected to a power supply.	NXT-BP batteries can be charged from either an external NXT-CHG battery charger or from within the NXA-BASE/B located below an NXT panel. • The NXA-BASE/B Battery base should be updated with the latest firmware (part of the Modero firmware KIT file) from **www.amx.com**. • The base can only charge batteries while the NXT panel is in Sleep Mode. If the panel parameters are set to their highest values, the priority for the power draw becomes the active panel functions and no power is routed to the base for charging. • Adjust the Display Timeout value to allow the panel to commence the Sleep Mode and begin charging batteries within the base (drawing power from a PSN). • Refer to the *NXA-BASE/B Battery Base Kit (FG2255K)* section on page 45 for more information.
NetLinx Studio only detects one of my connected Masters.	Each Master is give a Device Address of 00000. • Only one Master can be assigned to a particular System number. If you want to work with multiple Masters, open different instances of NetLinx Studio and assign each Master its own System value. • Example: a site has an NXC-ME260/64 and an NI-4000. In order to work with both units. The ME260/64 can be assigned System #1 and the NI-4000 can then be assigned System #2 using two open sessions of NetLinx Studio 2.
I can't seem to connect to a NetLinx Master using my NetLinx Studio 2.	• From the **Settings** > **Master Comm Settings** > **Communication Settings** > **Settings (for TCP/IP)**, uncheck the "**Automatically Ping the Master Controller** to ensure availability". • The pinging is to determine if the master is available, and to reply with a connection failure instantly if it is not. Without using the ping feature, you will still attempt to make a connection, but a failure will take longer to be recognized. Some firewalls and networks do not allow pinging, though, and the ping will then always result in a failure. • When connecting to a NetLinx Master controller via TCP/IP, the program will first try to ping the controller before attempting a connection. Pinging a device is relatively fast and will determine if the device is off-line, or if the TCP/IP address that was entered was incorrect. If you decide NOT to ping for availability and the controller is off-line, or you have an incorrect TCP/IP address, the program will try for 30-45 seconds to establish a connection. ***Note**:* If you are trying to connect to a Master controller that is behind a firewall, you may have to uncheck this option. Most firewalls will not allow ping requests to pass through for security reasons.
I have more that one Modero panel connected to my System Master and only one shows up.	Multiple NetLinx Compatible devices (such as Modero panels) can be associated for use with a single Master. Each Modero panel comes with a defaulted Device Number value of 10001. When using multiple panels, it can become very easy to overlook the need to assign different Device Number values to each panel. • Press and hold the grey Front Setup Access button for 3 seconds to open the Setup page. • Press the **Protected Setup** button (located on the lower-left of the panel page), enter ***1988*** into the on-screen Keypad's password field, and press **Done** when finished. • Enter a Device Number value for the panel into the Device Number Keypad. *The default is 10001 and the range is from 1 - 32000.*

Troubleshooting Information (Cont.)	
Symptom	Solution
After downloading a panel file or firmware to a G4 device, the panel behaves strangely.	Symptoms include: • Having to repeat the download. • Inability to make further downloads to the panel. May get "directory" errors, "graphics hierarchy" errors, etc.… indicating problems with the Compact Flash. • Panel will not boot, or gets stuck on "AMX" splash screen. • Other problems also started after downloading to a new panel or a panel with a TPD4 file that takes up a considerable amount of the available Compact Flash. Cause: • If the G4 device already contains a large enough file, subsequent downloads will take up more space than is available and could often corrupt the Compact Flash. The demo file that typically ships with G4 panels is one such file. Solution: • DO NOT download TPD4 files (of large size) over the demo pages, or any other large TPD4 file. • First download a small blank one page file to the G4 panel using the Normal Transfer option to send/download the page. Reboot the device, then do your regular file or firmware download.
My NXA-BASE/B Battery Base isn't being recognized by the NXT touch panel.	**The battery base CAN NOT be "hot swapped".** This swapping occurs when an NXT panel is currently being powered by a PSN6.5 and then is connected to a battery base containing NXT-BP batteries. Introducing a new power source onto an existing configuration can damage the NXA-BASE. Solution: If your base is not being recognized by the touch panel but is still providing power: • Launch the latest NetLinx Studio. • Refresh the particular System from within the OnLine Tree tab. • Identify the NXT panel using the battery base. • From the Main menu go to **Tools** > **Firmware Transfers** > **Send to NetLinx Device**. • Locate and select the 2250_XXX_v2 KIT file for the battery base. • Enter the Device and System values, verify the method of communication (IP recommended). • Click Send to reload the new base KIT file onto the NXA-BASE/B. If this above steps do not cause the base to be recognized by the NXT touch panel on the Setup page, contact AMX Technical Support for further assistance.
The Battery Base button doesn't appear on the panel's Setup page.	• Refer to the above troubleshooting symptom.
My RGB image looks blurry. The edges of the characters appear shadowed and/or blurry.	• Refer to the *Adjusting the Incoming Signal on the RGB Adjustment Page* section on page 145 for more detailed information on adjusting the skew of the incoming image.

Appendix

Text Formatting Codes for Bargraphs/Joysticks

Text formatting codes for bargraphs provide a mechanism to allow a portion of a bargraphs text to be dynamically provided information about the current status of the level (multistate and traditional). These codes would be entered into the text field along with any other text.

The following is a code list used for bargraphs:

Bargraph Text Code Inputs		
Code	Bargraph	Multi-State Bargraph
$P	Display the current percentage of the bargraph (derived from the Adjusted Level Value as it falls between the Range Values)	Display the current percentage of the bargraph (derived from the Adjusted Level Value as it falls between the Range Values)
$V	Raw Level Value	Raw Level Value
$L	Range Low Value	Range Low Value
$H	Range High Value	Range High Value
$S	N/A	Current State
$A	Adjusted Level Value (Range Low Value subtracted from the Raw Level Value)	Adjusted Level Value (Range Low Value subtracted from the Raw Level Value)
$R	Low Range subtracted from the High Range	Low Range subtracted from the High Range
$$	Dollar sign	Dollar sign

Buy changing the text on a button (via a VT command) you can modify the codes on a button. When one of the Text Formatting Codes is encountered by the firmware it is replaced with the correct value. These values are derived from the following operations:

Formatting Code Operations	
Code	Operation
$P	(Current Value - Range Low Value / Range High Value - Range Low Value) x 100
$V	Current Level Value
$L	Range Low Value
$H	Range High Value
$S	Current State (if regular bargraph then resolves to nothing)
$A	Current Value - Range Low Value
$R	Range High Value - Range Low Value

Given a current raw level value of 532, a range low value of 500 and a high range value of 600 the following text formatting codes would yield the following strings as shown in the table below:

Example	
Format	Display
$P%	32%
$A out of $R	32 out of 100
$A of 0 - $R	32 of 0 - 100
$V of $L - $H	532 of 500 - 600

Text Area Input Masking

Text Area Input Masking can be used to limit the allowed/correct characters that are entered into a text area. For example, in working with a zip code, a user could limit the entry to a max length of only 5 characters but, with input masking, you could limit them to 5 mandatory numerical digits and 4 optional numerical digits. A possible use for this feature is to enter information into form fields. The purpose of this feature is to:

- Force you to use correct type of characters (i.e. numbers vs. characters)
- Limit the number of characters in a text area
- Suggest proper format with fixed characters
- Right to Left
- Required or Optional
- Change/Force a Case
- Create multiple logical fields
- Specify range of characters/number for each field

With this feature, it is NOT necessary to:

- Limit you to a choice of selections
- Handle complex input tasks such as names, days of the weeks or months by name
- Perform complex validation such as Subnet Mask validation

Input mask character types

These character types define what information is allowed to be entered in any specific instance. The following table lists what characters in an input mask will define what characters are allowed in any given position.

Character Types	
Character	Masking Rule
0	Digit (0 to 9, entry required, plus [+] and minus [-] signs not allowed)
9	Digit or space (entry not required, plus and minus signs not allowed)
#	Digit or space (entry not required; plus and minus signs allowed)
L	Letter (A to Z, entry required)
?	Letter (A to Z, entry optional)
A	Letter or digit (entry required)
a	Letter or digit (entry optional)
&	Any character or a space (entry required)
C	Any character or a space (entry optional)

NOTE

The number of the above characters used determines the length of the input masking box. Example: 0000 requires an entry, requires digits to be used, and allows only 4 characters to be entered/used.

Refer to the following Send Commands for more detailed information:

- `^BIM` - Sets the input mask for the specified addresses. (see the *^BIM* section on page 194).
- `^BMF` subcommand **`%MK`** - sets the input mask of a text area (see the *^BMF* section on page 196).

Input mask ranges

These ranges allow a user to specify the minimum and maximum numeric value for a field. ***Only one range is allowed per field. Using a range implies a numeric entry ONLY.***

Input Mask Ranges	
Character	Meaning
[	Start range
]	End range
|	Range Separator

An example from the above table:

[0|255] This allows a user to enter a value from 0 to 255.

Input mask next field characters

These characters allow you to specify a list of characters that cause the keyboard to move the focus to the next field when pressed instead of inserting the text into the text area.

Input Mask Next Field Char	
Character	Meaning
{	Start Next Field List
}	End Next Field List

An example from the above table:

{.} or {:} or {.:} Tells the system that after a user hits any of these keys, proceed to the next text area input box.

Input mask operations

Input Mask Operators change the behavior of the field in the following way:

Input Mask Operators	
Character	Meaning
<	Forces all characters to be converted to lowercase
>	Forces all characters to be converted to uppercase
^	Sets the overflow flag for this field

Input mask literals

To define a literal character, enter any character, other than those shown in the above table *(including spaces, and symbols)*. A back-slash ('\') causes the character that follows it to be displayed as the literal character. For example, **\A** is displayed just as the letter **A**. To define one of the following characters as a literal character, precede that character with a back-slash. Text entry operation using Input Masks.

A keyboard entry using normal text entry is straightforward. However, once an input mask is applied, the behavior of the keyboard needs to change to accommodate the input mask's requirement. When working with masks, any literal characters in the mask will be "skipped" by any cursor movement including cursor keys, backspace, and delete.

When operating with a mask, the mask should be displayed with placeholders. The "-" character should display where you should enter a character. The arrow keys will move between the "-" characters and allow you to replace them. The text entry code operates as if it is in the overwrite mode. If the cursor is positioned on a character already entered and you type in a new (and valid) character, the new character replace the old character. There is no shifting of characters.

When working with ranges specified by the [] mask, the keyboard allows you to enter a number between the values listed in the ranges. If a user enters a value that is larger than the max, the maximum number of right-most characters is used to create a new, acceptable value.

- **Example 1**: If you type "125" into a field accepting 0-100, then the values displayed will be "1", "12", "25".
- **Example2**: If the max for the filed was 20, then the values displayed will be "1", "12", "5".

When data overflows from a numerical field, the overflow value is added to the previous field on the chain, **if** the overflow character was specified. In the above example, if the overflow flag was set, the first example will place the "1" into the previous logical field and the second example will place "12" in the previous logical field. If the overflow filed already contains a value, the new value will be inserted to the right of the current characters and the overflow field will be evaluated. Overflow continues to work until a filed with no overflow value is set or there are no more fields left (i.e. reached first field).

If a character is typed and that characters appear in the Next Field list, the keyboard should move the focus to the next field. For example, when entering time, a **":"** is used as a next field character. If you hit "1:2", the 1 is entered in the current field (hours) and then the focus is moved to the next field and 2 is entered in that field.

When entering time in a 12-hour format, entry of AM and PM is required. Instead of adding AM/PM to the input mask specification, the AM/PM should be handled within the NetLinx code. This allows a programmer to show/hide and provide discrete feedback for AM and PM.

Input mask output examples

The following are some common input masking examples:

Output Examples		
Common Name	Input Mask	Input
IP Address Quad	[0|255]{.}	Any value from 0 to 255
Hour	[1|12]{:}	Any value from 1 to 12
Minute/Second	[0|59]{:}	Any value from 0 to 59
Frames	[0|29]{:}	Any value from 0 to 29
Phone Numbers	(999) 000-0000	(555) 555-5555
Zip Code	00000-9999	75082-4567

URL Resources

A URL can be broken into several parts. For example: the URL *http://www.amx.com/company-info-home.asp*. This URL indicates that the protocol in use is **http** (HyperText Transport Protocol) and that the information resides on a host machine named **www.amx.com**. The image on that host machine is given an assignment (*by the program*) name of **company-info-home.asp** *(Active Server Page)*.

The exact meaning of this name on the host machine is both protocol dependent and host dependent. The information normally resides in a file, but it could be generated dynamically. This component of the URL is called the file component, even though the information is not necessarily in a file.

A URL can optionally specify a port, which is the port number to which the TCP connection is made on the remote host machine. If the port is not specified, the default port for the protocol is used instead. For example, the default port for http is 80. An alternative port could be specified as: http://www.amx.com:8080/company-info-home.asp.

NOTE

Any legal HTTP syntax can be used.

Special escape sequences

The system has only a limited knowledge of URL formats in that it transparently passes the URL information onto the server for translation. A user can then pass any parameters to the server side programs such as CGI scripts or active server pages. However; the system will parse the URL looking for special escape codes. When it finds an escape code it replaces that code with a particular piece of panel, button, or state information.
For example, "http://www.amx.com/img.asp?device=$DV" would become "http://www.amx.com/img.asp?device=10001". Other used escape sequences include:

Escape Sequences	
Sequence	Panel Information
$DV	Device Number
$SY	System Number
$IP	IP Address
$HN	Host Name
$MC	Mac Address
$ID	Neuron ID
$PX	X Resolution of current panel mode/file
$PY	Y Resolution of current panel mode/file
$BX	X Resolution of current button
$BY	Y Resolution of current button
$BN	Name of button
$ST	Current state
$AC	Address Code
$AP	Address Port
$CC	Channel Code
$CP	Channel Port
$LC	Level Code
$LP	Level Port

It's Your World - Take Control™

3000 RESEARCH DRIVE, RICHARDSON, TX 75082 USA • 800.222.0193 • 469.624.8000 • 469-624-7153 fax • 800.932.6993 technical support • www.amx.com

10/08 ©2008 AMX. All rights reserved. AMX and the AMX logo are registered trademarks of AMX. AMX reserves the right to alter specifications without notice at any time.